ANNEX 14

DRAFT ASSEMBLY RESOLUTION

ADOPTION OF THE CODE FOR THE CONSTRUCTION AND EQUIPMENT OF MOBILE OFFSHORE DRILLING UNITS, 2009 (2009 MODU CODE)

THE ASSEMBLY,

RECALLING Article 15(j) of the Convention on the International Maritime Organization concerning the functions of the Assembly in relation to regulations and guidelines concerning maritime safety,

NOTING that mobile offshore drilling units continue to be moved and operated internationally,

RECOGNIZING that the design criteria for such units are often quite different from those of conventional ships and that, by virtue of this, the application of international conventions, such as the International Convention for the Safety of Life at Sea, 1974, as amended, and the International Convention on Load Lines, 1966, as amended, is inappropriate in respect of mobile offshore drilling units,

RECALLING that, when the Code for the Construction and Equipment of Mobile Offshore Drilling Units (MODU Code) was adopted in 1979 by resolution A.414(XI), it was recognized that the design technology of mobile offshore drilling units was rapidly evolving and that new features of mobile offshore drilling units were being introduced to improve technical and safety standards,

RECALLING ALSO the adoption of the Code for the Construction and Equipment of Mobile Offshore Drilling Units (MODU Code), 1989, which superseded the 1979 MODU Code, by resolution A.649(16), following a number of tragic MODU casualties which emphasized the need for a review of the international safety standards developed by the Organization,

NOTING that, since the adoption of the 1989 MODU Code, ICAO has adopted amendments to the Convention on International Civil Aviation which impact on the provisions for helicopter facilities as contained in the 1989 MODU Code, and the Organization has adopted a number of amendments to regulations of SOLAS which are referenced in the 1989 MODU Code,

HAVING considered the recommendation made by the Maritime Safety Committee at its eighty-sixth session,

1. ADOPTS the Code for the Construction and Equipment of Mobile Offshore Drilling Units, 2009 (2009 MODU Code), set out in the Annex to this resolution, which supersedes the existing 1989 MODU Code adopted by resolution A.649(16), for mobile offshore drilling units the keels of which are laid or which are at a similar stage of construction on or after 1 January 2012;

2. INVITES all Governments concerned:

(a) to take appropriate steps to give effect to the 2009 MODU Code;

(b) to consider the Code as an equivalent, for purposes of application to mobile offshore drilling units, to the technical requirements of the aforementioned conventions;

(c) to inform the Organization of measures taken in this respect;

3. AUTHORIZES the Maritime Safety Committee to amend the 2009 MODU Code as appropriate, taking into consideration developments in design and technology, in consultation with appropriate organizations.

ANNEX

CODE FOR THE CONSTRUCTION AND EQUIPMENT OF MOBILE OFFSHORE DRILLING UNITS, 2009 (2009 MODU CODE)

CONTENTS

PREAMBLE

Chapter 1 – *General*

1.1 Purpose
1.2 Application
1.3 Definitions
1.4 Exemptions
1.5 Equivalents
1.6 Surveys and certification
1.7 Control
1.8 Casualties
1.9 Review of the Code

Chapter 2 – *Construction, strength and materials*

2.1 General
2.2 Access
2.3 Design loads
2.4 Structural analysis
2.5 Special considerations for surface units
2.6 Special considerations for self-elevating units
2.7 Special considerations for column-stabilized units
2.8 Towing arrangements
2.9 Fatigue analysis
2.10 Materials
2.11 Anti-fouling systems
2.12 Protective coatings of dedicated seawater ballast tanks
2.13 Construction portfolio
2.14 Welding
2.15 Testing
2.16 Drainage and sediment control

Chapter 3 – *Subdivision, stability and freeboard*

3.1 Inclining test
3.2 Righting moment and heeling moment curves
3.3 Intact stability criteria
3.4 Subdivision and damage stability
3.5 Extent of damage
3.6 Watertight integrity
3.7 Freeboard

Chapter 4 – *Machinery installations for all types of units*

4.1 General
4.2 Alternative design and arrangements
4.3 Machinery
4.4 Steam boilers and boiler feed systems
4.5 Steam pipe systems
4.6 Machinery controls
4.7 Air pressure systems
4.8 Arrangements for oil fuel, lubricating oil and other flammable oils
4.9 Bilge pumping arrangements
4.10 Ballast pumping arrangements on column-stabilized units
4.11 Protection against flooding
4.12 Anchoring arrangements for surface and column-stabilized units
4.13 Dynamic positioning systems
4.14 Elevating systems for self-elevating units

Chapter 5 – *Electrical installations for all types of units*

5.1 General
5.2 Alternative design and arrangements
5.3 Main source of electrical power
5.4 Emergency source of electrical power
5.5 Starting arrangements for emergency generators
5.6 Precautions against shock, fire and other hazards of electrical origin
5.7 Alarms and internal communication

Chapter 6 – *Machinery and electrical installations in hazardous areas for all types of units*

6.1 Zones
6.2 Classification of hazardous areas
6.3 Openings, access and ventilation conditions affecting the extent of hazardous areas
6.4 Ventilation of hazardous spaces
6.5 Emergency conditions due to drilling operations
6.6 Electrical installations in hazardous areas
6.7 Machinery installations in hazardous areas

Chapter 7 – *Machinery and electrical installations for self-propelled units*

7.1 General
7.2 Means of going astern
7.3 Steam boilers and boiler feed systems
7.4 Machinery controls
7.5 Steering
7.6 Electric and electrohydraulic steering gear
7.7 Communication between the navigating bridge and the engine-room
7.8 Engineers' alarm
7.9 Main source of electrical power
7.10 Emergency source of electrical power

Chapter 8 – *Periodically unattended machinery spaces for all types of units*

8.1 General
8.2 Application
8.3 Fire protection
8.4 Protection against flooding
8.5 Bridge control of propulsion machinery
8.6 Communication
8.7 Alarm system
8.8 Special provisions for machinery, boiler and electrical installations
8.9 Safety systems

Chapter 9 – *Fire safety*

9.1 Alternative design and arrangements
9.2 Structural fire protection
9.3 Protection of accommodation spaces, service spaces and control stations
9.4 Means of escape
9.5 Fire safety systems
9.6 Emergency escape breathing devices
9.7 Fire pumps, fire mains, hydrants and hoses
9.8 Fire-extinguishing arrangement in machinery spaces and in spaces containing fired processes
9.9 Portable fire extinguishers in accommodation, service and working spaces
9.10 Fire detection and alarm system
9.11 Flammable gas detection and alarm system
9.12 Hydrogen sulphide detection and alarm system
9.13 Fire-fighters' outfits
9.14 Recharging of air cylinders
9.15 Arrangements in machinery and working spaces
9.16 Provisions for helicopter facilities
9.17 Storage of gas cylinders
9.18 Fire control plan
9.19 Operational readiness and maintenance

Chapter 10 – *Life-saving appliances and equipment*

10.1 General
10.2 Alternative design and arrangements
10.3 Survival craft
10.4 Survival craft muster and embarkation arrangements
10.5 Survival craft launching stations
10.6 Stowage of survival craft
10.7 Survival craft launching and recovery arrangements
10.8 Rescue boats
10.9 Stowage of rescue boats
10.10 Rescue boat embarkation, launching and recovery arrangements
10.11 Lifejackets
10.12 Immersion suits and anti-exposure suits
10.13 Lifebuoys
10.14 Radio life-saving appliances
10.15 Distress flares

10.16 Line-throwing appliances
10.17 Operating instructions
10.18 Operational readiness, maintenance and inspections

Chapter 11 – *Radiocommunication and navigation*

11.1 General
11.2 Training
11.3 Self-propelled units
11.4 Non-self-propelled units under tow
11.5 Units stationary at the site or engaged in drilling operations
11.6 Helicopter communications
11.7 Internal communications
11.8 Performance standards
11.9 Survey of the radio station
11.10 Navigation equipment

Chapter 12 – *Lifting devices, personnel and pilot transfer*

12.1 Cranes
12.2 Lifting and hoisting equipment
12.3 Personnel lifts
12.4 Personnel and pilot transfer
12.5 Drilling derricks

Chapter 13 – Helicopter facilities

13.1 General
13.2 Definitions
13.3 Construction
13.4 Arrangements
13.5 Visual aids
13.6 Motion sensing system
13.7 Exemptions

Chapter 14 – Operations

14.1 Operating manuals
14.2 Helicopter facilities
14.3 Dangerous goods
14.4 Pollution prevention
14.5 Transfer of material, equipment or personnel
14.6 Diving systems
14.7 Safety of navigation
14.8 Emergency procedures
14.9 Emergency instructions
14.10 Training manual and onboard training aids
14.11 Practice musters and drills
14.12 Onboard training and instructions
14.13 Records

Appendix

PREAMBLE

1 This Code has been developed to provide an international standard for mobile offshore drilling units of new construction which will facilitate the international movement and operation of these units and ensure a level of safety for such units, and for personnel on board, equivalent to that required by the International Convention for the Safety of Life at Sea, 1974, as amended, and the Protocol of 1988 relating to the International Convention on Load Lines, 1966, for conventional ships engaged on international voyages. It is not intended that the provisions of the Code of Safety for Special Purpose Ships be applied in addition to the provisions of this Code.

2 Throughout the development of the Code, it was recognized that it must be based upon sound design and engineering principles and experience gained from operating such units; it was further recognized that design technology of mobile offshore drilling units is not only a complex technology but is continually evolving and that the Code should not remain static but be re-evaluated and revised as necessary. To this end the Organization will periodically review the Code, taking into account both experience and future development.

3 Any existing unit which complies with the provisions of this Code should be considered eligible for issuance of a certificate in accordance with this Code.

4 This Code is not intended to prohibit the use of an existing unit simply because its design, construction and equipment do not conform to this Code. Many existing mobile offshore drilling units have operated successfully and safely for extended periods of time and their operating history should be considered in evaluating their suitability to conduct international operations.

5 The coastal State may permit any unit designed to a lower standard than that of the Code to engage in operations having taken account of the local conditions (e.g., meteorological and oceanographic). Any such unit should, however, comply with safety requirements which in the opinion of the coastal State are adequate for the intended operation and ensure the overall safety of the unit and the personnel on board.

6 This Code does not include requirements for the drilling of subsea wells or the procedures for their control. Such drilling operations are subject to control by the coastal State.

CHAPTER 1

GENERAL

1.1 Purpose

The purpose of the Code for the Construction and Equipment of Mobile Offshore Drilling Units, 2009, hereinafter referred to as "the Code", is to recommend design criteria, construction standards and other safety measures for mobile offshore drilling units so as to minimize the risk to such units, to the personnel on board and to the environment.

1.2 Application

1.2.1 The Code applies to mobile offshore drilling units as defined in section 1.3, the keels of which are laid or which are at a similar stage of construction on or after 1 January 2012.

1.2.2 The coastal State may impose additional requirements regarding the operation of industrial systems not dealt with by the Code.

1.3 Definitions

For the purpose of the Code, unless expressly provided otherwise, the terms used therein have the meanings defined in this section.

1.3.1 *1988 LL Protocol* means the Protocol of 1988 relating to the International Convention on Load Lines, 1966, as amended.

1.3.2 *"A" class divisions* are as defined in SOLAS regulation II-2/3.

1.3.3 *Accommodation spaces* are those used for public spaces, corridors, lavatories, cabins, offices, hospitals, cinemas, games and hobbies rooms, pantries containing no cooking appliances and similar spaces. Public spaces are those portions of the accommodation which are used for halls, dining rooms, lounges and similar permanently enclosed spaces.

1.3.4 *Administration* means the Government of the State whose flag the unit is entitled to fly.

1.3.5 *Anniversary date* means the day and month of each year which will correspond to the date of expiry of the certificate.

1.3.6 *Auxiliary steering gear* is the equipment which is provided for effecting movement of the rudder for the purpose of steering the unit in the event of failure of the main steering gear.

1.3.7 *"B" class divisions* are as defined in SOLAS regulation II-2/3.

1.3.8 *"C" class divisions* are as defined in SOLAS regulation II-2/3.

1.3.9 *Certificate* means Mobile Offshore Drilling Unit Safety Certificate.

1.3.10 *Coastal State* means the Government of the State exercising administrative control over the drilling operations of the unit.

1.3.11 *Column-stabilized unit* is a unit with the main deck connected to the underwater hull or footings by columns or caissons.

1.3.12 *Continuous "B" class ceilings or linings* are those "B" class ceilings or linings which terminate only at an "A" or "B" class division.

1.3.13 *Control stations* are those spaces in which the unit's radio or main navigating equipment or the emergency source of power is located or where the fire recording or fire control equipment or the dynamic positioning control system is centralized or where a fire-extinguishing system serving various locations is situated. In the case of column-stabilized units a centralized ballast control station is a "control station". However, for purposes of the application of chapter 9, the space where the emergency source of power is located is not considered as being a control station.

1.3.14 *D or D-value* means the largest dimension of the helicopter when rotor(s) are turning measured from the most forward position of the main rotor tip path plane to the most rearward position of the tail rotor path plane or helicopter structure.

1.3.15 *Dead ship condition* is the condition under which the main propulsion plant, boilers and auxiliaries are not in operation due to the absence of power.

1.3.16 *Depth for freeboard* has the same meaning as defined in regulation 3 of the 1988 LL Protocol.

1.3.17 *Diving system* is the plant and equipment necessary for the safe conduct of diving operations from a mobile offshore drilling unit.

1.3.18 *Downflooding* means any flooding of the interior of any part of the buoyant structure of a unit through openings which cannot be closed watertight or weathertight, as appropriate, in order to meet the intact or damage stability criteria, or which are required for operational reasons to be left open.

1.3.19 *Emergency source of electrical power* is a source of electrical power intended to supply the necessary services in the event of failure of the main source of electrical power.

1.3.20 *Emergency switchboard* is a switchboard which, in the event of failure of the main system of electrical power supply, is directly supplied by the emergency source of electrical power and/or the transitional source of emergency power and is intended to distribute electrical energy to the emergency services.

1.3.21 *Enclosed spaces* are spaces delineated by floors, bulkheads and/or decks which may have doors or windows.

1.3.22 *Freeboard* is the distance measured vertically downwards amidships from the upper edge of the deck line to the upper edge of the related load line.

1.3.23 *FSS Code* means the International Code for Fire Safety Systems, adopted by the Maritime Safety Committee of the Organization by resolution MSC.98(73), as amended.

1.3.24 *FTP Code* means the International Code for Application of Fire Test Procedures, adopted by the Maritime Safety Committee of the Organization by resolution MSC.61(67), as amended.

1.3.25 *Gastight door* is a solid, close-fitting door designed to resist the passage of gas under normal atmospheric conditions.

1.3.26 *Hazardous areas* are all those areas where, due to the possible presence of a flammable atmosphere arising from the drilling operations, the use without proper consideration of machinery or electrical equipment may lead to fire hazard or explosion.

1.3.27 *Helideck* is a purpose-built helicopter landing platform located on a mobile offshore drilling unit (MODU).

1.3.28 *Industrial machinery and components* are the machinery and components which are used in connection with the drilling operation.

1.3.29 *Length (L)* has the same meaning as defined in regulation 3 of the 1988 LL Protocol.

1.3.30 *Lightweight* is the displacement of a unit in tonnes without variable deck load, fuel, lubricating oil, ballast water, fresh water and feedwater in tanks, consumable stores, and personnel and their effects.

1.3.31 *Low-flame spread* has the same meaning as defined in SOLAS regulation II-2/3.

1.3.32 *LSA Code* means the International Life-Saving Appliance Code, adopted by the Maritime Safety Committee of the Organization by resolution MSC.48(66), as amended.

1.3.33 *Machinery spaces* are all machinery spaces of category A and all other spaces containing propelling machinery, boilers and other fired processes, oil fuel units, steam and internal combustion engines, generators and major electrical machinery, oil filling stations, refrigerating, stabilizing, ventilation and air-conditioning machinery and similar spaces; and trunks to such spaces.

1.3.34 *Machinery spaces of category A* are all spaces which contain internal combustion-type machinery used either:

.1 for main propulsion; or

.2 for other purposes where such machinery has in the aggregate a total power of not less than 375 kW;

or which contain any oil-fired boiler or oil fuel unit; and trunks to such spaces.

1.3.35 *Main source of electrical power* is a source intended to supply electrical power for all services necessary for maintaining the unit in normal operational and habitable conditions.

1.3.36 *Main steering gear* is the machinery, the steering gear power units, if any, and ancillary equipment and the means of applying torque to the rudder stock, e.g. tiller or quadrant, necessary for effecting movement of the rudder for the purpose of steering the unit under normal service conditions.

1.3.37 *Main switchboard* is a switchboard directly supplied by the main source of electrical power and intended to distribute electrical energy to the unit's services.

1.3.38 *Maximum ahead service speed* is the greatest speed which the unit is designed to maintain in service at sea at its deepest seagoing draught.

1.3.39 *Maximum astern speed* is the speed which it is estimated the unit can attain at the designed maximum astern power at its deepest seagoing draught.

1.3.40 *Mobile offshore drilling unit (MODU)* or *unit* is a vessel capable of engaging in drilling operations for the exploration for or exploitation of resources beneath the seabed such as liquid or gaseous hydrocarbons, sulphur or salt.

1.3.41 *Mode of operation* means a condition or manner in which a unit may operate or function while on location or in transit. The modes of operation of a unit include the following:

.1 *Operating conditions* – conditions wherein a unit is on location for the purpose of conducting drilling operations, and combined environmental and operational loadings are within the appropriate design limits established for such operations. The unit may be either afloat or supported on the seabed, as applicable.

.2 *Severe storm conditions* – conditions wherein a unit may be subjected to the most severe environmental loading for which the unit is designed. Drilling operations are assumed to have been discontinued due to the severity of the environmental loading. The unit may be either afloat or supported on the seabed, as applicable.

.3 *Transit conditions* – conditions wherein a unit is moving from one geographical location to another.

1.3.42 *Non-combustible material* has the same meaning as defined in SOLAS regulation II-2/3.

1.3.43 *Normal operational and habitable conditions* means:

.1 conditions under which the unit as a whole, its machinery, services, means and aids ensuring safe navigation when underway, safety when in the industrial mode, fire and flooding safety, internal and external communications and signals, means of escape and winches for rescue boats, as well as the means of ensuring the minimum comfortable conditions of habitability, are in working order and functioning normally; and

.2 drilling operations.

1.3.44 *Oil fuel unit* is the equipment used for the preparation of oil fuel for delivery to an oil-fired boiler, or equipment used for the preparation for delivery of heated oil to an internal combustion engine, and includes any oil pressure pumps, filters and heaters dealing with oil at a pressure more than 0.18 N/mm^2. Oil transfer pumps are not considered oil fuel units.

1.3.45 *Organization* means the International Maritime Organization (IMO).

1.3.46 *Rescue boat* has the same meaning as defined in SOLAS regulation III/3.

1.3.47 *Self-elevating unit* is a unit with movable legs capable of raising its hull above the surface of the sea and lowering it back into the sea.

1.3.48 *Semi-enclosed locations* are locations where natural conditions of ventilation are notably different from those on open decks due to the presence of structures such as roofs, windbreaks and bulkheads and which are so arranged that dispersion of gas may not occur.

1.3.49 *Service spaces* are those used for galleys, pantries containing cooking appliances, lockers and store-rooms, workshops other than those forming part of the machinery spaces, and similar spaces and trunks to such spaces.

1.3.50 *SOLAS* means the International Convention for the Safety of Life at Sea, 1974, as amended.

1.3.51 *Standard fire test* is as defined in SOLAS regulation II-2/3.

1.3.52 *Steel or equivalent material* has the same meaning as defined in SOLAS regulation II-2/3.

1.3.53 *Steering gear power unit* means, in the case of:

.1 electric steering gear, an electric motor and its associated electrical equipment;

.2 electrohydraulic steering gear, an electric motor and its associated electrical equipment and connected pump;

.3 other hydraulic gear, a driving engine and connected pump.

1.3.54 *Surface unit* is a unit with a ship- or barge-type displacement hull of single or multiple hull construction intended for operation in the floating condition.

1.3.55 *Survival craft* has the same meaning as defined in SOLAS regulation III/3.

1.3.56 *Visitors* are personnel not regularly assigned to the unit.

1.3.57 *Watertight* means the capability of preventing the passage of water through the structure in any direction under a head of water for which the surrounding structure is designed.

1.3.58 *Weathertight* means that in any sea conditions water will not penetrate into the unit.

1.3.59 *Working spaces* are those open or enclosed spaces containing equipment and processes, associated with drilling operations, which are not included in *hazardous areas* and *machinery spaces*.

1.4 Exemptions

An Administration may exempt any unit which embodies features of a novel kind from any of the provisions of the Code the application of which might impede research into the development of such features. Any such unit should, however, comply with safety requirements which, in the opinion of that Administration, are adequate for the service intended and are such as to ensure the overall safety of the unit. The Administration which allows any such exemption should list such exemptions on the certificate and communicate to the Organization the particulars, together with the reasons therefor, so that the Organization may circulate the same to other Governments for the information of their officers.

1.5 Equivalents

1.5.1 Where the Code provides that a particular detail of design or construction, fitting, material, appliance or apparatus, or type thereof, should be fitted or carried in a unit, or that any particular provision should be made, the Administration may allow any other detail of design or construction, fitting, material, appliance or apparatus, or type thereof, to be fitted or carried, or any other provision to be made in that unit, if it is satisfied by trial thereof or otherwise that such detail of design or construction, fitting, material, appliance or apparatus, or type thereof, or provision, is at least as effective as that provided for in the Code.

1.5.2 When an Administration so allows any fitting, material, appliance, apparatus, item of equipment or type thereof, or provision, procedure, arrangement, novel design or application to be substituted, it should communicate to the Organization the particulars thereof, together with a report on the evidence submitted, so that the Organization may circulate the same to other Governments for the information of their officers.

1.6 Surveys and certification

1.6.1 Each unit should be subject to the surveys specified below:

.1 an *initial survey* before the unit is put in service or before the certificate is issued for the first time;

.2 a *renewal survey* at intervals specified by the Administration but not exceeding five years except where paragraph 1.6.11.2.1, 1.6.11.5 or 1.6.11.6 is applicable;

.3 an *intermediate survey* within three months before or after the second anniversary date or within three months before or after the third anniversary date of the certificate, which should take the place of one of the annual surveys specified in paragraph 1.6.1.4;

.4 an *annual survey* within three months before or after each anniversary date of the certificate;

.5 a minimum of two *dry-dock surveys* during any five-year period, except where paragraph 1.6.11.5 is applicable. Where paragraph 1.6.11.5 is applicable this five-year period may be extended to coincide with the extended period of the validity of the certificate. In all cases the intervals between any two such surveys should not exceed 36 months;

.6 *radio station surveys* in accordance with section 11.9; and

.7 an *additional survey* as the occasion arises.

1.6.2 The surveys referred to in paragraph 1.6.1 should be carried out as follows:

.1 the initial survey should include a complete inspection of the structure, safety equipment and other equipment, fittings, arrangements and material to ensure that they comply with the provisions of the Code, are in satisfactory condition and are fit for the service for which the unit is intended;

.2 the renewal survey should include an inspection of the structure, safety equipment and other equipment as referred to in paragraph 1.6.2.1 to ensure that they comply with the provisions of the Code, are in satisfactory condition and are fit for the service for which the unit is intended;

.3 the intermediate survey should include an inspection of the structure, fittings, arrangements and safety equipment to ensure that they remain satisfactory for the service for which the unit is intended;

.4 the annual survey should include a general inspection of the structure, safety equipment and other equipment as referred to in paragraph 1.6.2.1, to ensure that they have been maintained in accordance with paragraph 1.6.6.1 and that they remain satisfactory for the service for which the unit is intended;

.5 the dry-dock survey and the inspection of items surveyed at the same time should be such as to ensure that they remain satisfactory for the service for which the unit is intended. An Administration may allow underwater inspections in lieu of a dry-dock survey provided that they are satisfied that such an inspection is equivalent to a dry-dock survey;

.6 the radio survey should be sufficient to assure compliance with the relevant provisions for cargo ships of SOLAS chapter IV; and

.7 an additional survey, either general or partial according to the circumstances, should be made after a repair resulting from investigations prescribed in paragraph 1.6.6.3, or wherever any important repairs or renewals are made. The survey should be such as to ensure that the necessary repairs or renewals have been effectively made, that the material and workmanship of such repairs or renewals are in all respects satisfactory, and that the unit complies in all respects with the provisions of the Code.

1.6.3 The intermediate, annual and dry-dock surveys referred to in paragraphs 1.6.2.3, 1.6.2.4 and 1.6.2.5 should be endorsed on the certificate.

1.6.4 As an alternative to the renewal and intermediate surveys provided for in paragraphs 1.6.2.2 and 1.6.2.3 respectively, the Administration may, at the owner's request, approve a continuous survey programme provided that the extent and frequency of the surveys are equivalent to renewal and intermediate surveys. A copy of the continuous survey programme, together with the record of the surveys, should be kept on board the unit and the certificate annotated accordingly.

1.6.5.1 The inspection and survey of the units, so far as regards the enforcement of the provisions of the Code and the granting of exemptions therefrom, should be carried out by officers of the Administration. The Administration may, however, entrust the inspections and surveys either to surveyors nominated for the purpose or to organizations recognized by it.

1.6.5.2 An Administration nominating surveyors or recognizing organizations to conduct inspections and surveys as set forth in paragraph 1.6.5.1 should as a minimum empower any nominated surveyor or recognized organization to:

.1 require repairs to a unit; and

.2 carry out inspections and surveys if requested by the appropriate authorities of a port or coastal State.

The Administration should notify the Organization of the specific responsibilities and conditions of the authority delegated to nominated surveyors or recognized organizations.

1.6.5.3 When a nominated surveyor or recognized organization determines that the condition of the unit or its equipment does not correspond substantially with the particulars of the certificate or is such that the unit is not fit to operate without danger to the unit, or persons on board, such surveyor or organization should immediately ensure that corrective action is taken and should in due course notify the Administration. If such corrective action is not taken the certificate should be withdrawn and the Administration should be notified immediately; and, if the unit is in an area under the jurisdiction of another Government, the appropriate authorities of the port or coastal State should be notified immediately. When an officer of the Administration, a nominated surveyor or recognized organization has notified the appropriate authorities of the port or coastal State, the Government of the port or coastal State concerned should give such officer, surveyor or organization any necessary assistance to carry out their obligations under this regulation. When applicable, the Government of the port or coastal State concerned should ensure that the unit should not continue to operate until it can do so without danger to persons, the environment or the unit.

1.6.5.4 In every case, the Administration should fully guarantee the completeness and efficiency of the inspection and survey, and should undertake to ensure the necessary arrangements to satisfy this obligation.

1.6.6.1 The condition of the unit and its equipment should be maintained to conform with the provisions of the Code to ensure that the unit in all respects will remain fit to operate without danger to persons, the environment or the unit.

1.6.6.2 After any survey of the unit under this regulation has been completed, no change should be made to structure, equipment, fittings, arrangements and materials covered by the survey, without the sanction of the Administration.

1.6.6.3 Should an incident occur, or a defect be discovered, which affects the safety of the unit or the efficiency or completeness of the structure, equipment, fittings, arrangements or materials, the person in charge or the owner of the unit should report the incident or defect at the earliest opportunity to the Administration. In addition, the nominated surveyor or recognized organization responsible, who should cause investigations to be initiated, should determine whether a survey is necessary. If the unit is in an area under the jurisdiction of another Government, the person in charge or the owner of the unit should also report the incident or defect immediately to the appropriate authorities of the port or coastal State and the nominated surveyor or recognized organization should ascertain that such a report has been made.

1.6.7 A certificate called a Mobile Offshore Drilling Unit Safety Certificate (2009) may be issued after an initial or renewal survey to a unit which complies with the provisions of the Code. The Certificate should be issued or endorsed either by the Administration or by any person or organization recognized by it. In every case, that Administration assumes full responsibility for the certificate.

1.6.8 Any exemptions granted under section 1.4 should be clearly noted on the certificate.

1.6.9 A Contracting Government to both SOLAS and the 1988 LL Protocol may, at the request of the Administration, cause a unit to be surveyed and, if satisfied that the provisions of the Code are complied with, should issue or authorize the issue of a certificate to the unit and, where appropriate, endorse or authorize the endorsement of a certificate on the unit in accordance with the Code. Any certificate so issued should contain a statement to the effect that it has been issued at the request of the Government of the State the flag of which the unit is entitled to fly, and it should have the same force and receive the same recognition as a certificate issued under paragraph 1.6.7.

1.6.10 The certificate should be drawn up in the form corresponding to the model given in the appendix to the Code. If the language used is neither English nor French, the text should include a translation into one of these languages.

1.6.11.1 The Mobile Offshore Drilling Unit Safety Certificate (2009) should be issued for a period specified by the Administration which should not exceed five years.

1.6.11.2.1 Notwithstanding the provisions of paragraph 1.6.11.1, when the renewal survey is completed within three months before the expiry date of the existing certificate, the new certificate should be valid from the date of completion of the renewal survey to a date not exceeding five years from the date of expiry of the existing certificate.

1.6.11.2.2 When the renewal survey is completed after the expiry date of the existing certificate, the new certificate should be valid from the date of completion of the renewal survey to a date not exceeding five years from the date of expiry of the existing certificate.

1.6.11.2.3 When the renewal survey is completed more than three months before the expiry date of the existing certificate, the new certificate should be valid from the date of completion of the renewal survey to a date not exceeding five years from the date of completion of the renewal survey.

1.6.11.3 If a certificate is issued for a period of less than five years, the Administration may extend the validity of the certificate beyond the expiry date to the maximum period specified in paragraph 1.6.11.1, provided that the surveys when a certificate is issued for a period of five years are carried out.

1.6.11.4 If a renewal survey has been completed and a new certificate cannot be issued or placed on board the unit before the expiry date of the existing certificate, the person or organization authorized by the Administration may endorse the existing certificate and such a certificate should be accepted as valid for a further period which should not exceed five months from the expiry date.

1.6.11.5 If a unit at the time when a certificate expires is not in the place in which it is to be surveyed, the Administration may extend the period of validity of the certificate but this extension should be granted only for the purpose of allowing the unit to proceed to the place in which it is to be surveyed, and then only in cases where it appears proper and reasonable to do so. No certificate should be extended for a period longer than three months, and a unit to which an extension is granted should not, on its arrival in the place in which it is to be surveyed, be entitled by virtue of such extension to leave that place without having a new certificate. When the renewal survey is completed, the new certificate should be valid to a date not exceeding five years from the date of expiry of the existing certificate before the extension was granted.

1.6.11.6 In special circumstances, as determined by the Administration, a new certificate need not be dated from the date of expiry of the existing certificate as provided for in paragraph 1.6.11.2.2 or 1.6.11.5. In these circumstances, the new certificate should be valid to a date not exceeding five years from the date of completion of the renewal survey.

1.6.11.7 If an annual or intermediate survey is completed before the period specified, then:

.1 the anniversary date shown on the relevant certificate should be amended by endorsement to a date which should not be more than three months later than the date on which the survey was completed;

.2 the subsequent annual or intermediate survey required by the relevant regulations should be completed at the intervals prescribed by this regulation using the new anniversary date; and

.3 the expiry date may remain unchanged provided one or more annual or intermediate surveys, as appropriate, are carried out so that the maximum intervals between the surveys under paragraphs 1.6.1.3 and 1.6.1.4 are not exceeded.

1.6.11.8 A certificate issued under paragraph 1.6.7 or 1.6.9 should cease to be valid in any of the following cases:

.1 if the relevant surveys are not completed within the periods specified in paragraph 1.6.1;

.2 if the certificate is not endorsed in accordance with paragraph 1.6.3;

.3 upon transfer of the unit to the flag of another State. A new certificate should only be issued when the Government issuing the new certificate is fully satisfied that the unit is in compliance with the provisions of paragraphs 1.6.6.1 and 1.6.6.2. In the case of a transfer between Governments that are Contracting Governments to both SOLAS and the 1988 LL Protocol, if requested within three months after the transfer has taken place, the Government of the State whose flag the unit was formerly entitled to fly should, as soon as possible, transmit to the Administration a copy of the certificate carried by the unit before the transfer and, if available, copies of the relevant survey reports.

1.6.12 The privileges of the Code may not be claimed in favour of any unit unless it holds a valid certificate.

1.7 Control

1.7.1 Every unit when in an area under the jurisdiction of another Government is subject to control by officers duly authorized by such Government in so far as this control is directed towards verifying that the certificate issued under section 1.6 is valid.

1.7.2 Such certificate, if valid, should be accepted unless there are clear grounds for believing that the condition of the unit or its equipment does not correspond substantially with the particulars of the certificate or that the unit and its equipment are not in compliance with the provisions of paragraphs 1.6.6.1 and 1.6.6.2.

1.7.3 In the circumstances given in paragraph 1.7.2 or where the certificate has expired or ceased to be valid, the officer carrying out the control should take steps to ensure that the unit should not continue to operate (except, when appropriate, on a temporary basis) or leave the area for the purpose of proceeding to an area for repair if this could cause danger to the unit or persons on board.

1.7.4 In the event of this control giving rise to an intervention of any kind, the officer carrying out the control should forthwith inform, in writing, the consul or, in his absence, the nearest diplomatic representative of the State whose flag the unit is entitled to fly of all the circumstances in which intervention was deemed necessary. In addition, nominated surveyors or recognized organizations responsible for the issue of the certificates should also be notified. The facts concerning the intervention should be reported to the Organization.

1.7.5 When exercising control under this regulation all possible efforts should be made to avoid the operation of the unit being unduly interrupted or delayed. If a unit is unduly interrupted or delayed it should be entitled to compensation for any loss or damage suffered.

1.7.6 Notwithstanding the provisions of paragraphs 1.7.1 and 1.7.2, the provisions of section 1.6 are without prejudice to any rights of the coastal State under international law to impose its own requirements relating to the regulation, surveying and inspection of units engaged, or intending to engage, in the exploration or exploitation of the natural resources of those parts of the seabed and subsoil over which that State is entitled to exercise sovereign rights.

1.8 Casualties

1.8.1 Each Administration and each coastal State should undertake to conduct an investigation of any casualty occurring to any unit subject to its jurisdiction and subject to the provisions of the Code when it judges that such an investigation may assist in determining what changes in the Code might be desirable.[1]

1.8.2 Each Administration and each coastal State should undertake to supply the Organization with pertinent information concerning the findings of such investigations. No reports or recommendations of the Organization based upon such information should disclose the identity or nationality of the units concerned or in any manner fix or imply responsibility upon any unit or person.

1.9 Review of the Code

1.9.1 The Code should be reviewed by the Organization as necessary to consider the revision of existing provisions and the formulation of provisions for new developments in design, equipment or technology.

1.9.2 Where a new development in design, equipment or technology has been found acceptable to an Administration, that Administration may submit particulars of such development to the Organization for consideration of its incorporation into the Code.

---

[1] Refer to the Code of the International Standards and Recommended Practices for a Safety Investigation into a Marine Casualty or Marine Incident (Casualty Investigation Code), adopted by the Maritime Safety Committee of the Organization by resolution MSC.255(84).

CHAPTER 2

CONSTRUCTION, STRENGTH AND MATERIALS

2.1 General

2.1.1 Administrations should take appropriate action to ensure uniformity in the implementation and application of the provisions of this chapter.

2.1.2 The review and approval of the design of each unit should be carried out by officers of the Administration. However, the Administration may entrust this function to certifying authorities nominated for this purpose or to organizations recognized by it. In every case the Administration concerned should fully guarantee the completeness and efficiency of the design evaluation.

2.1.3 In addition to the provisions contained elsewhere in this Code, units should be designed, constructed and maintained in compliance with the structural, mechanical and electrical requirements of a classification society which:

.1 has recognized and relevant competence and experience with offshore petroleum activities;

.2 has established rules and procedures for classification of mobile offshore drilling units; and

.3 is recognized by the Administration in accordance with the provisions of SOLAS regulation XI-1/1, or with applicable national standards of the Administration which provide an equivalent level of safety.

2.2 Access

2.2.1 *Means of access*

2.2.1.1 Each space within the unit should be provided with at least one permanent means of access to enable, throughout the life of a unit, overall and close-up inspections and thickness measurements of the unit's structures to be carried out by the Administration, the company, and the unit's personnel and others as necessary. Such means of access should comply with the provisions of paragraph 2.2.4 and with the Technical provisions for means of access for inspections, adopted by the Maritime Safety Committee by resolution MSC.133(76), as may be amended by the Organization.

2.2.1.2 Where a permanent means of access may be susceptible to damage during normal operations or where it is impracticable to fit permanent means of access, the Administration may allow, in lieu thereof, the provision of movable or portable means of access, as specified in the Technical provisions, provided that the means of attaching, rigging, suspending or supporting the portable means of access forms a permanent part of the unit's structure. All portable equipment should be capable of being readily erected or deployed by the unit's personnel.

2.2.1.3 The construction and materials of all means of access and their attachment to the unit's structure should be to the satisfaction of the Administration. The means of access should be subject to inspection prior to, or in conjunction with, its use in carrying out surveys in accordance with section 1.6.

2.2.2 ***Safe access to holds, tanks, ballast tanks and other spaces***

2.2.2.1 Safe access[2] to holds, cofferdams, tanks and other spaces should be direct from the open deck and such as to ensure their complete inspection. Safe access may be from a machinery space, pump-room, deep cofferdam, pipe tunnel, hold, double hull space or similar compartment not intended for the carriage of oil or hazardous materials where it is impracticable to provide such access from an open deck.

2.2.2.2 Tanks, and subdivisions of tanks, having a length of 35 m or more, should be fitted with at least two access hatchways and ladders, as far apart as practicable. Tanks less than 35 m in length should be served by at least one access hatchway and ladder. When a tank is subdivided by one or more swash bulkheads or similar obstructions which do not allow ready means of access to the other parts of the tank, at least two hatchways and ladders should be fitted.

2.2.2.3 Each hold should be provided with at least two means of access as far apart as practicable. In general, these accesses should be arranged diagonally, e.g., one access near the forward bulkhead on the port side, the other one near the aft bulkhead on the starboard side.

2.2.3 ***Access manual***

2.2.3.1 A unit's means of access to carry out overall and close-up inspections and thickness measurements should be described in an access manual which may be incorporated in the unit's operating manual. The manual should be updated as necessary, and an updated copy maintained on board. The structure access manual should include the following for each space:

.1.1 plans showing the means of access to the space, with appropriate technical specifications and dimensions;

.1.2 plans showing the means of access within each space to enable an overall inspection to be carried out, with appropriate technical specifications and dimensions. The plans should indicate from where each area in the space can be inspected;

.1.3 plans showing the means of access within the space to enable close-up inspections to be carried out, with appropriate technical specifications and dimensions. The plans should indicate the positions of critical structural areas, whether the means of access is permanent or portable and from where each area can be inspected;

.1.4 instructions for inspecting and maintaining the structural strength of all means of access and means of attachment, taking into account any corrosive atmosphere that may be within the space;

---

[2] Refer to Recommendations for entering enclosed spaces aboard ships, adopted by the Organization by resolution A.864(20).

.1.5 instructions for safety guidance when rafting is used for close-up inspections and thickness measurements;

.1.6 instructions for the rigging and use of any portable means of access in a safe manner;

.1.7 an inventory of all portable means of access; and

.1.8 records of periodical inspections and maintenance of the unit's means of access.

2.2.3.2 For the purpose of this paragraph "critical structural areas" are locations which have been identified from calculations to require monitoring or from the service history of similar or sister units to be sensitive to cracking, buckling, deformation or corrosion which would impair the structural integrity of the unit.

2.2.4 ***General technical specifications***

2.2.4.1 For access through horizontal openings, hatches or manholes, the dimensions should be sufficient to allow a person wearing a self-contained air-breathing apparatus and protective equipment to ascend or descend any ladder without obstruction and also provide a clear opening to facilitate the hoisting of an injured person from the bottom of a confined space. The minimum clear opening should not be less than 600 mm x 600 mm. When access to a hold is arranged through a flush manhole in the deck or a hatch, the top of the ladder should be placed as close as possible to the deck or hatch coaming. Access hatch coamings having a height greater than 900 mm should also have steps on the outside in conjunction with the ladder.

2.2.4.2 For access through vertical openings, or manholes, in swash bulkheads, floors, girders and web frames providing passage through the length and breadth of the space, the minimum opening should be not less than 600 mm x 800 mm at a height of not more than 600 mm from the bottom shell plating unless gratings or other footholds are provided.

2.3 Design loads

2.3.1 The modes of operation for each unit are to be investigated using realistic loading conditions including gravity loading with relevant environmental loading for its intended areas of operation. The following environmental considerations should be included where applicable: wind, wave, current, ice, seabed conditions, temperature, fouling and earthquake.

2.3.2 Where possible, the above design environmental conditions should be based upon significant data with a period of recurrence of at least 50 years for the most severe anticipated environment.

2.3.3 Results from relevant model tests may be used to substantiate or amplify calculations.

2.3.4 Limiting design data for each mode of operation should be stated in the operating manual.

Wind loading

2.3.5 Sustained and gust wind velocities, as relevant, should be considered when determining wind loading. Pressures and resultant forces should be calculated by the method referred to in section 3.2 or by some other method to the satisfaction of the Administration.

Wave loading

2.3.6 Design wave criteria should be described by design wave energy spectra or deterministic design waves having appropriate shape and size. Consideration should be given to waves of lesser height, where, due to their period, the effects on structural elements may be greater.

2.3.7 The wave forces utilized in the design analysis should include the effects of immersion, heeling and accelerations due to motion. Theories used for the calculation of wave forces and the selection of coefficients should be to the satisfaction of the Administration.

Current loading

2.3.8 Consideration should be given to the interaction of current and waves. Where necessary, the two should be superimposed by adding the current velocity vectorially to the wave particle velocity. The resultant velocity should be used in calculating the structural loading due to current and waves.

Loading due to vortex shedding

2.3.9 Consideration should be given to loading induced in structural members due to vortex shedding.

Deck loading

2.3.10 A loading plan should be prepared to the satisfaction of the Administration showing the maximum design uniform and concentrated deck loading for each area for each mode of operation.

Other loadings

2.3.11 Other relevant loadings should be determined in a manner to the satisfaction of the Administration.

2.4 Structural analysis

2.4.1 Sufficient loading conditions for all modes of operation should be analysed to enable the critical design cases for all principal structural components to be evaluated. This design analysis should be to the satisfaction of the Administration.

2.4.2 The scantlings should be determined on the basis of criteria which combine, in a rational manner, the individual stress components in each structural element. The allowable stresses should be to the satisfaction of the Administration.

2.4.3 Local stresses, including stresses caused by circumferential loading on tubular members, should be added to primary stresses in evaluating combined stress levels.

2.4.4 The buckling strength of structural members should be evaluated where appropriate.

2.4.5 Where deemed necessary by the Administration, a fatigue analysis based on intended operating areas or environments should be provided.

2.4.6 The effect of notches, local stress concentrations and other stress raisers should be allowed for in the design of primary structural elements.

2.4.7 Where possible, structural joints should not be designed to transmit primary tensile stresses through the thickness of plates integral with the joint. Where such joints are unavoidable, the plate material properties and inspection procedures selected to prevent lamellar tearing should be to the satisfaction of the Administration.

2.5 Special considerations for surface units

2.5.1 The required strength of the unit should be maintained in way of the drilling well, and particular attention should be given to the transition between fore-and-aft members. The plating of the well should also be suitably stiffened to prevent damage when the unit is in transit.

2.5.2 Consideration should be given to the scantlings necessary to maintain strength in way of large hatches.

2.5.3 The structure in way of components of the position mooring system such as fairleads and winches should be designed to withstand the stresses imposed when a mooring line is loaded to its breaking strength.

2.6 Special considerations for self-elevating units

2.6.1 The hull strength should be evaluated in the elevated position for the specified environmental conditions with maximum gravity loads aboard and with the unit supported by all legs. The distribution of these loads in the hull structure should be determined by a method of rational analysis. Scantlings should be calculated on the basis of this analysis, but should not be less than those required for other modes of operation.

2.6.2 The unit should be so designed as to enable the hull to clear the highest design wave including the combined effects of astronomical and storm tides. The minimum clearance may be the lesser of either 1.2 m or 10% of the combined storm tide, astronomical tide and height of the design wave above the mean low water level.

2.6.3 Legs should be designed to withstand the dynamic loads which may be encountered by their unsupported length while being lowered to the bottom, and also to withstand the shock of bottom contact due to wave action on the hull. The maximum design motions, sea state and bottom conditions for operations to raise or lower the hull should be clearly stated in the operating manual.

2.6.4 When evaluating leg stresses with the unit in the elevated position, the maximum overturning moment on the unit due to the most adverse combination of applicable environmental and gravity loadings should be considered.

2.6.5 Legs should be designed for the most severe environmental transit conditions anticipated including wind moments, gravity moments and accelerations resulting from unit motions. The Administration should be provided with calculations, an analysis based on model tests, or a combination of both. Acceptable transit conditions should be included in the operating manual. For some transit conditions, it may be necessary to reinforce or support the legs, or to remove sections to ensure their structural integrity.

2.6.6 Structural members which transmit loads between the legs and the hull should be designed for the maximum loads transmitted and so arranged as to diffuse the loads into the hull structure.

2.6.7 When a mat is utilized to transmit the bottom bearing loads, attention should be given to the attachment of the legs so that the loads are diffused into the mat.

2.6.8 Where tanks in the mat are not open to the sea, the scantlings should be based on a design head using the maximum water depth and tidal effects.

2.6.9 Mats should be designed to withstand the loads encountered during lowering including the shock of bottom contact due to wave action on the hull.

2.6.10 The effect of possible scouring action (loss of bottom support) should be considered. The effect of skirt plates, where provided, should be given special consideration.

2.6.11 Except for those units utilizing a bottom mat, the capability should be provided to pre-load each leg to the maximum applicable combined load after initial positioning at a site. The pre-loading procedures should be included in the operating manual.

2.6.12 Deckhouses located near the side shell of a unit may be required to have scantlings similar to those of an unprotected house front. Other deckhouses should have scantlings suitable for their size, function and location.

2.7 Special considerations for column-stabilized units

2.7.1 Unless deck structures are designed for wave impact, a clearance acceptable to the Administration should be maintained between passing wave crests and the deck structure. The Administration should be provided with model test data, reports on past operating experience with similar configurations or by calculations showing that adequate provision is made to maintain this clearance.

2.7.2 For units designed to be supported by the seabed the clearance in paragraph 2.6.2 should be maintained.

2.7.3 The structural arrangement of the upper hull is to be considered with regard to the structural integrity of the unit after the assumed failure of any primary girder. The Administration may require a structural analysis showing satisfactory protection against overall collapse of the unit after such an assumed failure when exposed to environmental loading corresponding to a one-year return period for the intended area of operation.

2.7.4 The scantlings of the upper structure should not be less than those required for the loading shown in the deck loading plan.

2.7.5 When an approved mode of operation or damage condition in accordance with the provisions governing stability allows the upper structure to become waterborne, special consideration should be given to the resulting structural loading.

2.7.6 The scantlings of columns, lower hulls and footings should be based on the evaluation of hydrostatic pressure loading and combined loading including wave and current considerations.

2.7.7 Where a column, lower hull or footing is a part of the overall structural frame of a unit, consideration should also be given to stresses resulting from deflections due to the applicable combined loading.

2.7.8 Particular consideration should be given to structural arrangements and details in areas subject to high local loading resulting from, for example, external damage, wave impact, partially filled tanks or bottom bearing operations.

2.7.9 When a unit is designed for operations while supported by the seabed, the footings should be designed to withstand the shock of bottom contact due to wave action on the hull. Such units should also be evaluated for the effects of possible scouring action (loss of bottom support). The effect of skirt plates, where provided, should be given special consideration.

2.7.10 The structure in way of components of the position mooring system such as fairleads and winches should be designed to withstand the stresses imposed when a mooring line is loaded to its breaking strength.

2.7.11 Bracing members should be designed to make the structure effective against applicable combined loading and, when the unit is supported by the seabed, against the possibility of uneven bottom bearing loading. Bracing members should also be investigated, where applicable, for combined stresses including local bending stresses due to buoyancy, wave forces and current forces.

2.7.12 The unit's structure should be able to withstand the loss of any slender bracing member without causing overall collapse when exposed to environmental loading corresponding to a one-year return period for the intended area of operation.

2.7.13 Where applicable, consideration should be given to local stresses caused by wave impact.

2.7.14 Where bracings are watertight they should be designed to prevent collapse from hydrostatic pressure. Underwater bracing should be made watertight and have a leak detection system.

2.7.15 Consideration should be given to the need for ring frames to maintain stiffness and shape in tubular bracing members.

2.8 Towing arrangements

2.8.1 The design and arrangement of towing fittings should have regard to both normal and emergency conditions.

2.8.2 Arrangements, equipment and fittings provided in accordance with paragraph 2.8.1 should meet the appropriate requirements of the Administration or an organization recognized by the Administration under paragraph 1.6.5.1.[3]

2.8.3 Each fitting or item of equipment provided under this regulation should be clearly marked with any restrictions associated with its safe operation, taking into account the strength of its attachment to the unit's structure.

---

[3] Refer to the Guidelines for safe ocean towing (MSC/Circ.884).

2.9 Fatigue analysis

2.9.1 The possibility of fatigue damage due to cyclic loading should be considered in the design of self-elevating and column-stabilized units.

2.9.2 The fatigue analysis should be based on the intended mode and area of operations to be considered in the unit's design.

2.9.3 The fatigue analysis should take into account the intended design life of the unit and the accessibility of load-carrying members for inspection.

2.10 Materials

2.10.1 Units should be constructed from steel or other suitable material having properties acceptable to the Administration taking into consideration the temperature extremes in the areas in which the unit is intended to operate.

2.10.2 Consideration should be given to the minimization of hazardous substances used in the design and construction of the unit, and should facilitate recycling and removal of hazardous materials.[4]

2.10.3 Materials which contain asbestos should be prohibited.

2.11 Anti-fouling systems

If anti-fouling systems are installed, they should conform to the requirements of the International Convention on the Control of Harmful Anti-fouling Systems on Ships, 2001.

2.12 Protective coatings of dedicated seawater ballast tanks

2.12.1 All dedicated seawater ballast tanks should be coated during construction in accordance with the recommendations of the Organization.[5] For the purpose of this section pre-load tanks on self-elevating units are to be considered dedicated seawater ballast tanks. Mat tanks and spud cans on such units are not to be considered dedicated seawater ballast tanks.

2.12.2 Maintenance of the protective coating system should be included in the overall unit's maintenance scheme. The effectiveness of the protective coating system should be verified during the life of a unit by the Administration or an organization recognized by the Administration, based on the guidelines developed by the Organization.[6]

2.13 Construction portfolio

A construction portfolio should be prepared and a copy placed on board the unit. It should include plans showing the location and extent of application of different grades and strengths of materials, together with a description of the materials and welding procedures employed, and any

---

4 Refer to the Guidelines on ship recycling, adopted by the Organization by resolution A.962(23).

5 Refer to Performance standard for protective coatings for dedicated seawater ballast tanks in all types of ships and double-side skin spaces of bulk carriers, adopted by the Maritime Safety Committee by resolution MSC.215(82).

6 Refer to the Guidelines for maintenance and repair of protective coatings (MSC.1/Circ.1330).

other relevant construction information. Restrictions or prohibitions regarding repairs or modifications should be included.

2.14 Welding

The welding procedures employed during construction should be to a recognized international standard. Welders should be qualified in the welding processes and procedures utilized. The selection of welds for testing and the methods utilized should meet the requirements of a recognized classification society.

2.15 Testing

Upon completion, boundaries of tanks should be tested to the satisfaction of the Administration.

2.16 Drainage and sediment control[7]

All ballast and preload tanks and related piping systems should be designed to facilitate effective drainage and removal of sediments. Coatings which could entrain sediments and harmful aquatic organisms should be avoided.

[7] Refer to the Guidelines for the control and management of ships' ballast water to minimize the transfer of harmful aquatic organisms and pathogens, adopted by the Organization by resolution A.868(20).

CHAPTER 3

SUBDIVISION, STABILITY AND FREEBOARD

3.1 Inclining test

3.1.1 An inclining test should be required for the first unit of a design, when the unit is as near to completion as possible, to determine accurately the light ship data (weight and position of centre of gravity).

3.1.2 For successive units which are identical by design, the light ship data of the first unit of the series may be accepted by the Administration in lieu of an inclining test, provided the difference in light ship displacement or position of centre of gravity due to weight changes for minor differences in machinery, outfitting or equipment, confirmed by the results of a lightweight survey, is less than 1% of the values of the light ship displacement and principal horizontal dimensions as determined for the first of the series. Extra care should be given to the detailed weight calculation and comparison with the original unit of a series of column-stabilized, semisubmersible types as these, even though identical by design, are recognized as being unlikely to attain an acceptable similarity of weight or centre of gravity to warrant a waiver of the inclining test.

3.1.3 The results of the inclining test, or those of the lightweight survey together with the inclining test results for the first unit should be indicated in the operating manual.

3.1.4 A record of all changes to machinery, structure, outfitting and equipment that affect the light ship data should be maintained in a light ship data alterations log and be taken into account in daily operations.

3.1.5 For column-stabilized units:

.1 A lightweight survey or inclining test should be conducted at the first renewal survey. If a lightweight survey is conducted and it indicates a change from the calculated light ship displacement in excess of 1% of the operating displacement, an inclining test should be conducted, or the difference in weight should be placed in an indisputably conservative vertical centre of gravity and approved by the Administration.

.2 If the survey or test at the first renewal survey demonstrated that the unit was maintaining an effective weight control programme, and at succeeding renewal surveys this is confirmed by the records under paragraph 3.1.4, light ship displacement may be verified in operation by comparison of the calculated and observed draught. Where the difference between the expected displacement and the actual displacement based upon draught readings exceed 1% of the operating displacement, a lightweight survey should be completed in accordance with paragraph 3.1.5.1.

3.1.6 The inclining test or lightweight survey should be carried out in the presence of an officer of the Administration, or a duly authorized person or representative of an approved organization.

3.2 Righting moment and heeling moment curves

3.2.1 Curves of righting moments and of wind heeling moments similar to figure 3-1 with supporting calculations should be prepared covering the full range of operating draughts, including those in transit conditions, taking into account the maximum loading of materials in the most unfavourable position applicable. The righting moment curves and wind heeling moment curves should be related to the most critical axes. Account should be taken of the free surface of liquids in tanks.

3.2.2 Where equipment is of such a nature that it can be lowered and stowed, additional wind heeling moment curves may be necessary and such data should clearly indicate the position of such equipment. Provisions regarding the lowering and effective stowage of such equipment should be included in the operating manual under section 14.1.

3.2.3 The curves of wind heeling moments should be drawn for wind forces calculated by the following formula:

$$F = 0.5 C_s C_H \rho V^2 A$$

where:

F = the wind force (newtons)

C_s = the shape coefficient depending on the shape of the structural member exposed to the wind (see table 3-1)

C_H = the height coefficient depending on the height above sea level of the structural member exposed to wind (see table 3-2)

ρ = the air mass density (1.222 kg/m^3)

V = the wind velocity (metres per second)

A = the projected area of all exposed surfaces in either the upright or the heeled condition (square metres).

3.2.4 Wind forces should be considered from any direction relative to the unit and the value of the wind velocity should be as follows:

.1 In general a minimum wind velocity of 36 m/s (70 knots) for offshore service should be used for normal operating conditions and a minimum wind velocity of 51.5 m/s (100 knots) should be used for the severe storm conditions.

.2 Where a unit is to be limited in operation to sheltered locations (protected inland waters such as lakes, bays, swamps, rivers, etc.) consideration should be given to a reduced wind velocity of not less than 25.8 m/s (50 knots) for normal operating conditions.

3.2.5 In calculating the projected areas to the vertical plane, the area of surfaces exposed to wind due to heel or trim, such as under-deck surfaces, etc., should be included using the appropriate shape factor. Open truss work may be approximated by taking 30% of the projected block area of both the front and back section, i.e. 60% of the projected area of one side.

3.2.6 In calculating the wind heeling moments, the lever of the wind overturning force should be taken vertically from the centre of pressure of all surfaces exposed to the wind to the centre of lateral resistance of the underwater body of the unit. The unit is to be assumed floating free of mooring restraint.

3.2.7 The wind heeling moment curve should be calculated for a sufficient number of heel angles to define the curve. For ship-shaped hulls the curve may be assumed to vary as the cosine function of vessel heel.

3.2.8 Wind heeling moments derived from wind tunnel tests on a representative model of the unit may be considered as alternatives to the method given in paragraphs 3.2.3 to 3.2.7. Such heeling moment determination should include lift and drag effects at various applicable heel angles.

Table 3-1 – Values of the coefficient C_s

Shape	C_s
Spherical	0.4
Cylindrical	0.5
Large flat surface (hull, deckhouse, smooth under-deck areas)	1.0
Drilling derrick	1.25
Wires	1.2
Exposed beams and girders under deck	1.3
Small parts	1.4
Isolated shapes (crane, beam, etc.)	1.5
Clustered deckhouses or similar structures	1.1

Table 3-2 – Values of the coefficient C_H

Height above sea level (metres)	C_H
0 – 15.3	1.00
15.3 – 30.5	1.10
30.5 – 46.0	1.20
46.0 – 61.0	1.30
61.0 – 76.0	1.37
76.0 – 91.5	1.43
91.5 – 106.5	1.48
106.5 – 122.0	1.52
122.0 – 137.0	1.56
137.0 – 152.5	1.60
152.5 – 167.5	1.63
167.5 – 183.0	1.67
183.0 – 198.0	1.70

Height above sea level (metres)	C_H
198.0 – 213.5	1.72
213.5 – 228.5	1.75
228.5 – 244.0	1.77
244.0 – 259.0	1.79
above 259	1.80

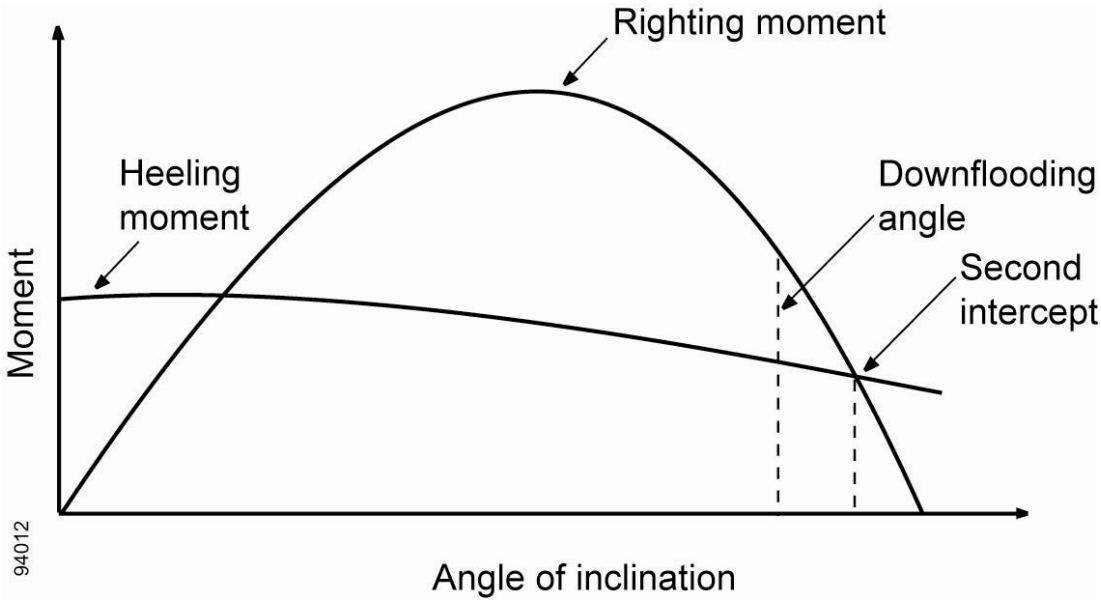

Figure 3-1 – Righting moment and heeling moment curves

3.3 Intact stability criteria

3.3.1 The stability of a unit in each mode of operation should meet the following criteria (see also figure 3-1):

.1 For surface and self-elevating units the area under the righting moment curve to the second intercept or downflooding angle, whichever is less, should be not less than 40% in excess of the area under the wind heeling moment curve to the same limiting angle.

.2 For column-stabilized units[8] the area under the righting moment curve to the angle of downflooding should be not less than 30% in excess of the area under the wind heeling moment curve to the same limiting angle.

.3 The righting moment curve should be positive over the entire range of angles from upright to the second intercept.

[8] Refer to An example of alternative intact stability criteria for twin-pontoon column-stabilized semisubmersible units, adopted by the Organization by resolution A.650(16).

3.3.2 Each unit should be capable of attaining a severe storm condition in a period of time consistent with the meteorological conditions. The procedures recommended and the approximate length of time required, considering both operating conditions and transit conditions, should be contained in the operating manual. It should be possible to achieve the severe storm condition without the removal or relocation of solid consumables or other variable load. However, the Administration may permit loading a unit past the point at which solid consumables would have to be removed or relocated to go to severe storm condition under the following conditions, provided the allowable KG is not exceeded:

.1 in a geographic location where weather conditions annually or seasonally do not become sufficiently severe to require a unit to go to severe storm condition; or

.2 where a unit is required to support extra deck load for a short period of time that falls well within a period for which the weather forecast is favourable.

The geographic locations, weather conditions and loading conditions in which this is permitted should be identified in the operating manual.

3.3.3 Alternative stability criteria may be considered by the Administration, provided an equivalent level of safety is maintained and if they are demonstrated to afford adequate positive initial stability. In determining the acceptability of such criteria, the Administration should consider at least the following and take into account as appropriate:

.1 environmental conditions representing realistic winds (including gusts) and waves appropriate for world-wide service in various modes of operation;

.2 dynamic response of a unit. Analysis should include the results of wind tunnel tests, wave tank model tests, and non-linear simulation, where appropriate. Any wind and wave spectra used should cover sufficient frequency ranges to ensure that critical motion responses are obtained;

.3 potential for flooding taking into account dynamic responses in a seaway;

.4 susceptibility to capsizing considering the unit's restoration energy and the static inclination due to the mean wind speed and the maximum dynamic response;

.5 an adequate safety margin to account for uncertainties.

3.4 Subdivision and damage stability

Surface and self-elevating units

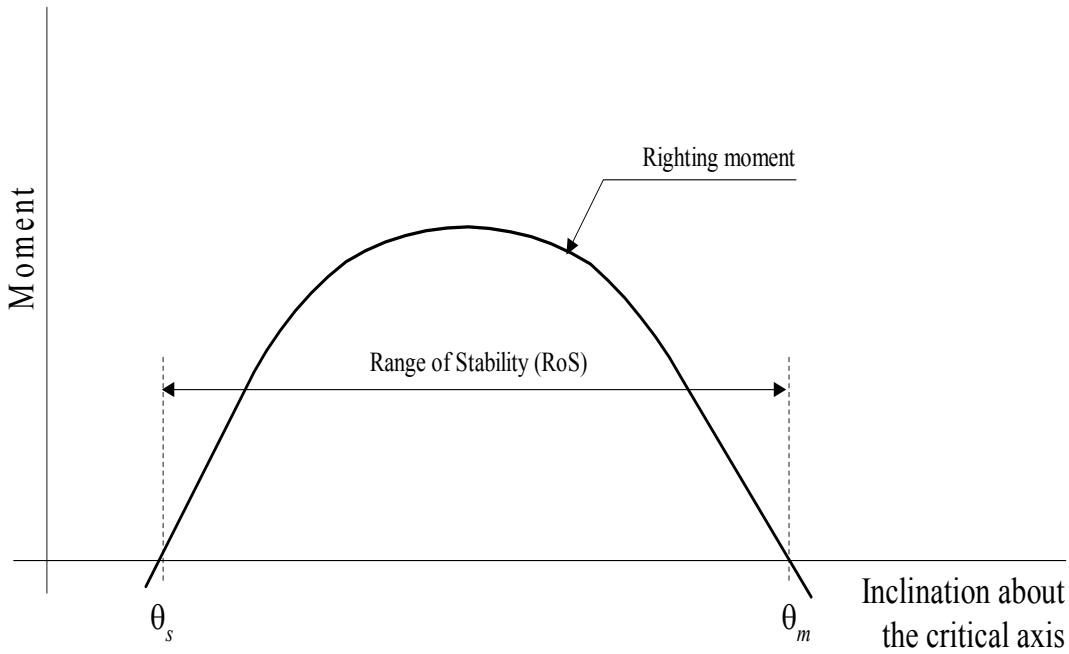

Figure 3-2 – Residual stability for self-elevating units

3.4.1 The unit should have sufficient freeboard and be subdivided by means of watertight decks and bulkheads to provide sufficient buoyancy and stability to withstand:

.1 in general, the flooding of any one compartment in any operating or transit condition consistent with the damage assumptions set out in section 3.5; and

.2 for a self-elevating unit, the flooding of any single compartment while meeting the following criterion (see figure 3-2):

$RoS \geq 7^{o}+(1.5\theta_s)$

where:

$RoS \geq 10^{o}$

RoS = range of stability, in degrees = $\theta_m - \theta_s$

where:

θ_m = maximum angle of positive stability, in degrees

θ_s = static angle of inclination after damage, in degrees

The range of stability is determined without reference to the angle of downflooding.

3.4.2 The unit should have sufficient reserve stability in a damaged condition to withstand the wind heeling moment based on a wind velocity of 25.8 m/s (50 knots) superimposed from any direction. In this condition the final waterline, after flooding, should be below the lower edge of any downflooding opening.

Column-stabilized units

3.4.3 The unit should have sufficient freeboard and be subdivided by means of watertight decks and bulkheads to provide sufficient buoyancy and stability to withstand a wind heeling moment induced by a wind velocity of 25.8 m/s (50 knots) superimposed from any direction in any operating or transit condition, taking the following considerations into account:

.1 the angle of inclination after the damage set out in paragraph 3.5.10.2 should not be greater than 17°;

.2 any opening below the final waterline should be made watertight, and openings within 4 m above the final waterline should be made weathertight;

.3 the righting moment curve, after the damage set out above, should have, from the first intercept to the lesser of the extent of weathertight integrity under paragraph 3.4.3.2 and the second intercept, a range of at least 7°. Within this range, the righting moment curve should reach a value of at least twice the wind heeling moment curve, both being measured at the same angle.[9] See figure 3-3 below.

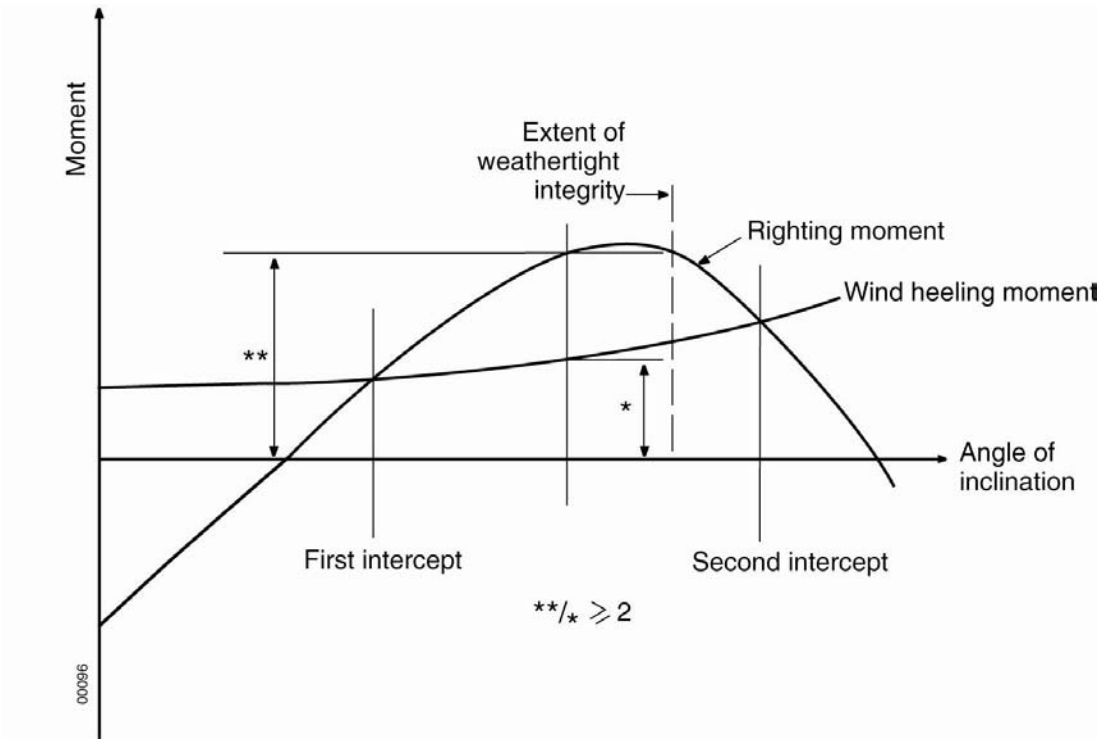

Figure 3-3 – Righting moment and wind heeling moment curves

[9] Refer to An example of alternative stability criteria for a range of positive stability after damage or flooding for column-stabilized semisubmersible units, adopted by the Organization by resolution A.651(16).

3.4.4 The unit should provide sufficient buoyancy and stability in any operating or transit condition to withstand the flooding of any watertight compartment wholly or partially below the waterline in question, which is a pump-room, a room containing machinery with a salt water cooling system or a compartment adjacent to the sea, taking the following considerations into account:

.1 the angle of inclination after flooding should not be greater than 25°;

.2 any opening below the final waterline should be made watertight;

.3 a range of positive stability[10] should be provided, beyond the calculated angle of inclination in these conditions, of at least 7°.

All types of units

3.4.5 Compliance with the provisions of paragraphs 3.4.1 to 3.4.4 should be determined by calculations which take into consideration the proportions and design characteristics of the unit and the arrangements and configuration of the damaged compartments. In making these calculations, it should be assumed that the unit is in the worst anticipated service condition as regards stability and is floating free of mooring restraints.

3.4.6 The ability to reduce angles of inclination by pumping out or ballasting compartments or application of mooring forces, etc., should not be considered as justifying any relaxation of these provisions.

3.4.7 Alternative subdivision and damage stability criteria may be considered for approval by the Administration provided an equivalent level of safety is maintained. In determining the acceptability of such criteria, the Administration should consider at least the following and take into account:

.1 extent of damage as set out in section 3.5;

.2 on column-stabilized units, the flooding of any one compartment as set out in paragraph 3.4.4;

.3 the provision of an adequate margin against capsizing.

3.5 Extent of damage

Surface units

3.5.1 In assessing the damage stability of surface units, the following extent of damage should be assumed to occur between effective watertight bulkheads:

.1 horizontal penetration: 1.5 m; and

.2 vertical extent: from the base line upwards without limit.

---

[10] Refer to An example of alternative stability criteria for a range of positive stability after damage or flooding for column-stabilized semisubmersible units, adopted by the Organization by resolution A.651(16).

3.5.2 The distance between effective watertight bulkheads or their nearest stepped portions which are positioned within the assumed extent of horizontal penetration should be not less than 3 m; where there is a lesser distance, one or more of the adjacent bulkheads should be disregarded.

3.5.3 Where damage of a lesser extent than in paragraph 3.5.1 results in a more severe condition, such lesser extent should be assumed.

3.5.4 All piping, ventilation systems, trunks, etc., within the extent of damage referred to in paragraph 3.5.1 should be assumed to be damaged. Positive means of closure should be provided at watertight boundaries to preclude the progressive flooding of other spaces which are intended to be intact.

Self-elevating units

3.5.5 In assessing the damage stability of self-elevating units, the following extent of damage should be assumed to occur between effective watertight bulkheads:

.1 horizontal penetration: 1.5 m; and

.2 vertical extent: from the base line upwards without limit.

3.5.6 The distance between effective watertight bulkheads or their nearest stepped portions which are positioned within the assumed extent of horizontal penetration should be not less than 3 m; where there is a lesser distance, one or more of the adjacent bulkheads should be disregarded.

3.5.7 Where damage of a lesser extent than in paragraph 3.5.5 results in a more severe condition, such lesser extent should be assumed.

3.5.8 Where a mat is fitted, the above extent of damage should be applied to both the platform and the mat but not simultaneously, unless deemed necessary by the Administration due to their close proximity to each other.

3.5.9 All piping, ventilation systems, trunks, etc., within the extent of damage referred to in paragraph 3.5.5 should be assumed to be damaged. Positive means of closure should be provided at watertight boundaries to preclude the progressive flooding of other spaces which are intended to be intact.

Column-stabilized units

3.5.10 In assessing the damage stability of column-stabilized units, the following extent of damage should be assumed:

.1 Only those columns, underwater hulls and braces on the periphery of the unit should be assumed to be damaged and the damage should be assumed in the exposed portions of the columns, underwater hulls and braces.

.2 Columns and braces should be assumed to be flooded by damage having a vertical extent of 3 m occurring at any level between 5 m above and 3 m below the draughts specified in the operating manual. Where a watertight flat is located within this region, the damage should be assumed to have occurred in both

compartments above and below the watertight flat in question. Lesser distances above or below the draughts may be applied to the satisfaction of the Administration, taking into account the actual operating conditions. However, the required damage region should extend at least 1.5 m above and below the draught specified in the operating manual.

.3 No vertical bulkhead should be assumed to be damaged, except where bulkheads are spaced closer than a distance of one eighth of the column perimeter at the draught under consideration, measured at the periphery, in which case one or more of the bulkheads should be disregarded.

.4 Horizontal penetration of damage should be assumed to be 1.5 m.

.5 Underwater hull or footings should be assumed to be damaged when operating in a transit condition in the same manner as indicated in paragraphs 3.5.10.1, 3.5.10.2, 3.5.10.4 and either paragraph 3.5.10.3 or 3.5.6, having regard to their shape.

.6 All piping, ventilation systems, trunks, etc., within the extent of damage should be assumed to be damaged. Positive means of closure should be provided at watertight boundaries to preclude the progressive flooding of other spaces which are intended to be intact.

3.6 Watertight integrity

3.6.1 The number of openings in watertight subdivisions should be kept to a minimum compatible with the design and safe operation of the unit. Where penetrations of watertight decks and bulkheads are necessary for access, piping, ventilation, electrical cables, etc., arrangements should be made to maintain the watertight integrity of the enclosed compartments.

3.6.2 Where valves are provided at watertight boundaries to maintain watertight integrity, these valves should be capable of being locally operated. Remote operation may be from a pump-room or other normally manned space, a weather deck, or a deck which is above the final waterline after flooding. In the case of a column-stabilized unit this would be the central ballast control station. Valve position indicators should be provided at the remote control station.

3.6.3 Watertight doors should be designed to withstand water pressure to a head up to the bulkhead deck or freeboard deck respectively. A prototype pressure test should be conducted for each type and size of door to be installed on the unit at a test pressure corresponding to at least the head required for the intended location. The prototype test should be carried out before the door is fitted. The installation method and procedure for fitting the door on board should correspond to that of the prototype test. When fitted on board, each door should be checked for proper seating between the bulkhead, the frame and the door. Large doors or hatches of a design and size that would make pressure testing impracticable may be exempted from the prototype pressure test, provided that it is demonstrated by calculations that the doors or hatches maintain watertightness at the design pressure, with a proper margin of resistance. After installation, every such door, hatch or ramp should be tested by means of a hose test or equivalent.

3.6.4 For self-elevating units the ventilation system valves required to maintain watertight integrity should be kept closed when the unit is afloat. Necessary ventilation in this case should be arranged by alternative approved methods.

Internal openings

3.6.5 The means to ensure the watertight integrity of internal openings should comply with the following:

.1 Doors and hatch covers which are used during the operation of the unit while afloat should be remotely controlled from the central ballast control station and should also be operable locally from each side. Open/shut indicators should be provided at the control station.

.2 Doors or hatch covers in self-elevating units, or doors placed above the deepest load line draft in column-stabilized and surface units, which are normally closed while the unit is afloat may be of the quick acting type and should be provided with an alarm system (e.g., light signals) showing personnel both locally and at the central ballast control station whether the doors or hatch covers in question are open or closed. A notice should be affixed to each such door or hatch cover stating that it is not to be left open while the unit is afloat.

.3 Remotely operated doors should meet SOLAS regulation II-1/25-9.2.

3.6.6 The means to ensure the watertight integrity of internal openings which are intended only to provide access for inspection and are kept permanently closed during the operation of the unit, while afloat, should have a notice affixed to each such closing appliance stating that it is to be kept closed while the unit is afloat; however, manholes fitted with close bolted covers need not be so marked.

External openings

3.6.7 All downflooding openings the lower edge of which is submerged when the unit is inclined to the first intercept between the righting moment and wind heeling moment curves in any intact or damaged condition should be fitted with a suitable watertight closing appliance, such as closely spaced bolted covers.

3.6.8 Where flooding of chain lockers or other buoyant volumes may occur, the openings to these spaces should be considered as downflooding points.

3.7 Freeboard

General

3.7.1 The requirements of the 1988 LL Protocol, including those relating to certification, should apply to all units and certificates should be issued as appropriate. The minimum freeboard of units which cannot be computed by the normal methods laid down by that Protocol should be determined on the basis of meeting the applicable intact stability, damage stability and structural requirements for transit conditions and drilling operations while afloat. The freeboard should not be less than that computed from the Protocol where applicable.

3.7.2 The requirements of the 1988 LL Protocol with respect to weathertightness and watertightness of decks, superstructures, deckhouses, doors, hatchway covers, other openings, ventilators, air pipes, scuppers, inlets and discharges, etc., should be taken as a basis for all units in the afloat condition.

3.7.3 In general, heights of hatch and ventilator coamings, air pipes, door sills, etc., in exposed positions and their means of closing should be determined by consideration of the provisions regarding both intact and damage stability.

3.7.4 All downflooding openings which may become submerged before the angle of inclination at which the required area under the intact righting arm curve is achieved should be fitted with weathertight closing appliances.

3.7.5 With regard to damage stability, the provisions of paragraphs 3.4.3.2, 3.4.4 and 3.6.7 should apply.

3.7.6 Administrations should give special consideration to the position of openings which cannot be closed in emergencies, such as air intakes for emergency generators, having regard to the intact righting arm curves and the final waterline after assumed damage.

Surface units

3.7.7 Load lines should be assigned to surface units as calculated under the terms of the 1988 LL Protocol and should be subject to all the conditions of assignment of that Protocol.

3.7.8 Where it is necessary to assign a greater than minimum freeboard to meet the provisions regarding intact or damage stability or on account of any other restriction imposed by the Administration, regulation 6(6) of the 1988 LL Protocol should apply. When such a freeboard is assigned, seasonal marks above the centre of the ring should not be marked and any seasonal marks below the centre of the ring should be marked. If a unit is assigned a greater than minimum freeboard at the request of the owner, regulation 6(6) need not apply.

3.7.9 Where moonpools are arranged within the hull in open communication with the sea, the volume of the moonpool should not be included in the calculation of any hydrostatic properties. If the moonpool has a larger cross-sectional area above the waterline at 85% of the depth for freeboard than below, an addition should be made to the geometric freeboard corresponding to the lost buoyancy. This addition for the excess portion above the waterline at 85% of the depth for freeboard should be made as prescribed below for wells or recesses. If an enclosed superstructure contains part of the moonpool, deduction should be made for the effective length of the superstructure. Where open wells or recesses are arranged in the freeboard deck, a correction equal to the volume of the well or recess to the freeboard deck divided by the waterplane area at 85% of the depth for freeboard should be made to the freeboard obtained after all other corrections, except bow height correction, have been made. Free surface effects of the flooded well or recess should be taken into account in stability calculations.

3.7.10 The procedure described in paragraph 3.7.9 should also apply in cases of small notches or relatively narrow cut-outs at the stern of the unit.

3.7.11 Narrow wing extensions at the stern of the unit should be considered as appendages and excluded for the determination of length (L) and for the calculation of freeboards. The Administration should determine the effect of such wing extensions with regard to the provisions relating to the strength of unit based upon length (L).

Self-elevating units

3.7.12 Load lines should be assigned to self-elevating units as calculated under the terms of the 1988 LL Protocol. When floating, or when in transit from one operational area to another, units should be subject to all the conditions of assignment of that Protocol unless specifically excepted. However, these units should not be subject to the terms of that Protocol while they are supported by the seabed or are in the process of lowering or raising their legs.

3.7.13 The minimum freeboard of units which due to their configuration cannot be computed by the normal methods laid down by the 1988 LL Protocol should be determined on the basis of meeting applicable provisions regarding intact stability, damage stability and structure in the afloat condition.

3.7.14 Where it is necessary to assign a greater than minimum freeboard to meet intact or damage stability provisions or on account of any other restriction imposed by the Administration, regulation 6(6) of the 1988 LL Protocol should apply. When such a freeboard is assigned, seasonal marks above the centre of the ring should not be marked and any seasonal marks below the centre of the ring should be marked. If a unit is assigned a greater than minimum freeboard at the request of the owner, regulation 6(6) need not apply.

3.7.15 Where moonpools are arranged within the hull in open communication with the sea, the volume of the moonpool should not be included in the calculation of any hydrostatic properties. If the moonpool has a larger cross-sectional area above the waterline at 85% of the depth for freeboard than below, an addition should be made to the geometric freeboard corresponding to the lost buoyancy. This addition for the excess portion above the waterline at 85% of the depth for freeboard should be made as prescribed below for wells or recesses. If an enclosed superstructure contains part of the moonpool, deduction should be made for the effective length of the superstructure. Where open wells or recesses are arranged in the freeboard deck, a correction equal to the volume of the well or recess to the freeboard deck divided by the waterplane area at 85% of the depth for freeboard should be made to the freeboard obtained after all other corrections, except bow height correction, have been made. Free surface effects of the flooded well or recess should be taken into account in stability calculations.

3.7.16 The procedure described in paragraph 3.7.15 should apply in cases of small notches or relatively narrow cut-outs at the stern of the unit.

3.7.17 Narrow wing extensions at the stern of the unit should be considered as appendages and excluded for the determination of length (L) and for the calculation of freeboards. The Administration should determine the effect of such wing extensions with regard to the requirements of the 1988 LL Protocol for the strength of unit based upon length (L).

3.7.18 Self-elevating units may be manned when under tow. In such cases a unit would be subject to the bow height and reserve buoyancy requirements which may not always be possible to achieve. In such circumstances, the Administration should consider the extent of application of regulations 39(1), 39(2) and 39(5) of the 1988 LL Protocol, as amended, and give special consideration to such units, having regard to the occasional nature of such voyages on predetermined routes and to prevailing weather conditions.

3.7.19 Some self-elevating units utilize a large mat or similar supporting structure which contributes to the buoyancy when the unit is floating. In such cases the mat or similar supporting structure should be ignored in the calculation of freeboard. The mat or similar supporting structure should, however, always be taken into account in the evaluation of the stability of the unit when floating since its vertical position relative to the upper hull may be critical.

Column-stabilized units

3.7.20 The hull form of this type of unit makes the calculation of geometric freeboard in accordance with the provisions of chapter III of the 1988 LL Protocol impracticable. Therefore the minimum freeboard of each column-stabilized unit should be determined by meeting the applicable provisions for:

.1 the strength of the unit's structure;

.2 the minimum clearance between passing wave crests and deck structure (see paragraphs 2.7.1 to 2.7.3); and

.3 intact and damage stability.

3.7.21 The minimum freeboard should be marked in appropriate locations on the structure.

3.7.22 The enclosed deck structure of each column-stabilized unit should be made weathertight.

3.7.23 Windows, sidescuttles and portlights, including those of the non-opening type, or other similar openings should not be located below the deck structure of column-stabilized units.

3.7.24 Administrations should give special consideration to the position of openings which cannot be closed in emergencies, such as air intakes for emergency generators, having regard to the intact righting arm curves and the final waterline after assumed damage.

CHAPTER 4

MACHINERY INSTALLATIONS FOR ALL TYPES OF UNITS

4.1 General[11]

4.1.1 The provisions regarding machinery and electrical installations contained in chapters 4 to 8 provide protection for personnel from fire, electric shock or other physical injuries. The provisions apply to both marine and industrial machinery.

4.1.2 Codes and standards of practice which have been proven to be effective by actual application by the offshore drilling industry which are not in conflict with this Code, and which are acceptable to the Administration, may be applied in addition to these provisions.

4.1.3 All machinery, electrical equipment, boilers and other pressure vessels, associated piping systems, fittings and wiring should be of a design and construction adequate for the intended service and should be so installed and protected as to reduce to a minimum any danger to persons on board, due regard being paid to moving parts, hot surfaces and other hazards. The design should have regard to materials used in construction, and to the marine and industrial purposes for which the equipment is intended, the working conditions and the environmental conditions to which it will be subjected. Consideration should be given to the consequences of the failure of systems and equipment essential to the safety of the unit.

4.1.4 All machinery, components and systems essential to the safe operation of a unit should be designed to operate under the following static conditions of inclination:

.1 column-stabilized units – from upright to an angle of inclination of 15° in any direction;

.2 self-elevating units – from upright to an angle of inclination of 10° in any direction;

.3 surface units – from upright and in level trim to an angle of inclination of 15° either way and simultaneously trimmed up to 5° by the bow or stern.

The Administration may permit or require deviations from these angles, taking into consideration the type, size and service conditions of the unit.

4.2 Alternative design and arrangements

When alternative design or arrangements deviate from the prescriptive provisions of the Code, an engineering analysis, evaluation and approval of the design and arrangements should be carried out in accordance with SOLAS regulation II-1/55 based on the guidelines developed by the Organization.[12]

---

[11] Refer to the Guidelines for engine-room layout, design and arrangement (MSC/Circ.834).

[12] Refer to the Guidelines on alternative design and arrangements for SOLAS chapters II-1 and III (MSC.1/Circ.1212).

4.3 Machinery

4.3.1 All boilers, all parts of machinery, all steam, hydraulic, pneumatic and other systems and their associated fittings which are under internal pressure should be subjected to appropriate tests including a pressure test before being put into service for the first time.

4.3.2 Adequate provisions and arrangements should be made to facilitate safe access, cleaning, inspection and maintenance of machinery including boilers and pressure vessels.

4.3.3 Where risk from overspeeding of machinery exists, means should be provided to ensure that the safe speed is not exceeded.

4.3.4 Where machinery including pressure vessels or any parts of such machinery are subject to internal pressure and may be subject to dangerous overpressure, means should, where applicable, be provided which will protect against such excessive pressure.

4.3.5 All gearing, shafts and couplings used for transmission of power to machinery should be designed and constructed so that they will withstand the maximum working stresses to which they may be subjected in all service conditions, taking into account the type of engines by which they are driven or of which they form part.

4.3.6 Internal combustion engines of a cylinder diameter of 200 mm or a crankcase volume of 0.6 m^3 and above should be provided with crankcase explosion relief valves of an approved type with sufficient relief area. The relief valves should be arranged or provided with means to ensure that discharge from them is directed so as to minimize the possibility of injury to personnel.

4.3.7 Machinery, where applicable, should be provided with automatic shutoff arrangements or alarms in the case of failures, such as lubricating oil supply failure, which could lead rapidly to complete breakdown, damage or explosion. The Administration may permit provisions for overriding automatic shutoff devices.

4.3.8 Means should be provided whereby normal operation of vital systems, such as ballast systems in semisubmersible units, jacking systems in self-elevating units and blow-out preventers, can be sustained or restored even though one of the essential auxiliaries becomes inoperable.

4.3.9 Means should be provided to ensure that machinery can be brought into operation from the “dead ship” condition without external aid.

4.4 Steam boilers and boiler feed systems

4.4.1 Every steam boiler and every unfired steam generator should be provided with not less than two safety valves of adequate capacity. However, the Administration may, having regard to the output or any other features of any boiler or unfired steam generator, permit only one safety valve to be fitted if it is satisfied that adequate protection against overpressure is provided.

4.4.2 Every oil-fired boiler which is intended to operate without manual supervision should have safety arrangements which shut off the fuel supply and give an alarm at an attended location in the case of low water level, air supply failure or flame failure.

4.4.3 Every steam generating system which could be rendered dangerous by the failure of its feedwater supply should be provided with not less than two separate feedwater systems from and including the feed pumps, noting that a single penetration of the steam drum is acceptable. For those services not essential for the safety of the unit, only one feedwater system is required if automatic shutdown of the steam generating system upon loss of the feedwater supply is provided. Means should be provided which will prevent overpressure in any part of the feedwater system.

4.4.4 Boilers should be provided with means to supervise and control the quality of the feedwater. As far as practicable, means should be provided to preclude the entry of oil or other contaminants which may adversely affect the boiler.

4.4.5 Every boiler essential for the safety of the unit and which is designed to have a water level should be provided with at least two means for indicating its water level, at least one of which should be a direct-reading gauge glass.

4.5 Steam pipe systems

4.5.1 Every steam pipe and every fitting connected thereto through which steam may pass should be so designed, constructed and installed as to withstand the maximum working stresses to which it may be subjected.

4.5.2 Efficient means should be provided for draining every steam pipe where dangerous water hammer action might otherwise occur.

4.5.3 If a steam pipe or fitting may receive steam from any source at a higher pressure than that for which it is designed, a suitable reducing valve, relief valve and pressure gauge should be fitted.

4.6 Machinery controls

4.6.1 Machinery essential for the safety of the unit should be provided with effective means for its operation and control.

4.6.2 Automatic starting, operational and control systems for machinery essential for the safety of the unit should, in general, include provisions for manually overriding the automatic controls. Failure of any part of the automatic and remote control system should not prevent the use of the manual override. Visual indication should be provided to show whether or not the override has been actuated.

4.7 Air pressure systems

4.7.1 In every unit means should be provided to prevent excess pressure in any part of compressed air systems and where water jackets or casings of air compressors and coolers might be subjected to dangerous excess pressure due to leakage into them from air pressure parts. Suitable pressure-relief arrangements should be provided for all systems.

4.7.2 The starting air arrangements for internal combustion engines should be adequately protected against the effects of backfiring and internal explosions in the starting air pipes.

4.7.3 Starting air pipes from the air receivers to internal combustion engines should be entirely separate from the compressor discharge pipe system.

4.7.4 Provision should be made to reduce to a minimum the entry of oil into the starting air pressure systems and to drain these systems.

4.8 Arrangements for oil fuel, lubricating oil and other flammable oils

4.8.1 Arrangements for the storage, distribution and utilization of oil fuel should be such as to ensure the safety of the unit and persons on board.

4.8.2 Arrangements for the storage, distribution and utilization of oil used in pressure lubrication systems should be such as to ensure the safety of the unit and persons on board.

4.8.3 Arrangements for the storage, distribution and utilization of other flammable oils employed under pressure in power transmission systems, control and activating systems and heat transfer systems should be such as to ensure the safety of the unit and persons on board.

4.8.4 In machinery spaces pipes, fittings and valves carrying flammable oils should be of a material approved by the Administration, having regard to the risk of fire.

4.8.5 Location and arrangement of vent pipes for fuel oil service, settling and lubrication oil tanks should be such that, in the event of a broken vent pipe, the risk of ingress of rainwater or seawater is minimized.

4.8.6 Two fuel oil service tanks for each type of fuel used on board necessary for propulsion and vital systems or equivalent arrangements should be provided, each with a capacity of at least eight hours at the maximum continuous rating of the propulsion plant, if any, and normal operating load of the generator plant.

4.8.7 High pressure fuel delivery lines

.1 All external high pressure fuel delivery lines between the high pressure fuel pumps and fuel injectors should be protected with a jacketed piping system capable of containing fuel from a high pressure line failure. A jacketed pipe incorporates an outer pipe into which the high pressure fuel pipe is placed forming a permanent assembly. The jacketed piping system should include a means for collection of leakages and arrangements should be provided for an alarm to be given of a fuel line failure.

.2 All surfaces with temperatures above 220°C, which may be impinged as a result of a fuel system failure, should be properly insulated.

.3 Oil fuel lines should be screened or otherwise suitably protected to avoid, as far as practicable, oil spray or oil leakages onto hot surfaces, into machinery air intakes, or other sources of ignition. The number of joints in such piping systems should be kept to a minimum.

4.9 Bilge pumping arrangements

4.9.1 An efficient bilge pumping system should be provided, capable of pumping from and draining watertight compartments other than spaces permanently appropriated for the carriage of fresh water, water ballast, oil fuel or liquid cargo and for which other efficient means of pumping are provided, under all practical conditions whether the unit is upright or inclined, as specified in paragraph 4.1.4. Additional suctions should be provided in large compartments or compartments of unusual form, as deemed necessary by the Administration. Arrangements should be made whereby water in the compartment may find its way to the suction pipes. Compartments not provided with a bilge suction may be drained to other spaces provided with bilge pumping capability. Means should be provided to detect the presence of water in such compartments which are adjacent to the sea or adjacent to tanks containing liquids and in void compartments through which pipes conveying liquids pass. If the Administration is satisfied that the safety of the unit is not impaired the bilge pumping arrangements and the means to detect the presence of water may be dispensed with in particular compartments.

4.9.2 At least two self-priming power pumps connected to each bilge main should be provided. Sanitary, ballast and general service pumps may be accepted as independent power bilge pumps if fitted with the necessary connections to the bilge pumping system.

4.9.3 All bilge pipes should be of steel or other suitable material having properties acceptable to the Administration. Special consideration should be given to the design of bilge lines passing through ballast tanks taking into account effects of corrosion or other deterioration.

4.9.4 The arrangement of the bilge pumping system should be such as to prevent the possibility of water passing from the sea into dry spaces, or inadvertently from one compartment to another.

4.9.5 All distribution boxes and manually operated valves in connection with the bilge pumping arrangements should be in positions which are accessible under ordinary circumstances. Where such valves are located in normally unmanned spaces below the assigned load line and not provided with high bilge water level alarms, they should be operable from outside the space.

4.9.6 A means to indicate whether a valve is open or closed should be provided at each location from which the valve can be controlled. The indicator should rely on movement of the valve spindle.

4.9.7 Drainage of hazardous areas should be given special consideration having regard to the risk of explosion (see paragraph 6.3.2).

4.9.8 The following additional provisions are applicable to column-stabilized units:

.1 Chain lockers which, if flooded, could substantially affect the unit's stability should be provided with a remote means to detect flooding and a permanently installed means of dewatering. Remote indication of flooding should be provided at the central ballast control station.

.2 At least one of the pumps referred to in paragraph 4.9.2 and pump-room bilge suction valves should be capable of both remote and local operation.

.3 Propulsion rooms and pump-rooms in lower hulls should be provided with two independent systems for high bilge water level detection providing an audible and visual alarm at the central ballast control station.

4.10 Ballast pumping arrangements on column-stabilized units

Ballast pumps and piping

4.10.1 Units should be provided with an efficient pumping system capable of ballasting and deballasting any ballast tank under normal operating and transit conditions. Alternatively, Administrations may permit controlled gravity ballasting.

4.10.2 The ballast system should provide the capability to bring the unit, while in an intact condition, from the maximum normal operating draught to a severe storm draught, or to a greater distance, as may be specified by the Administration, within three hours.

4.10.3 The ballast system should be arranged to provide at least two independent pumps so that the system remains operational in the event of failure of any one such pump. The pumps provided need not be dedicated ballast pumps, but should be readily available for such use at all times.

4.10.4 The ballast system should be capable of operating after the damage specified in paragraph 3.5.10 and have the capability of restoring the unit to a level trim and safe draught condition without taking on additional ballast, with any one pump inoperable. The Administration may permit counter-flooding as an operational procedure. Counter-flooding is not to be considered as a means to improve the suction head available to the ballast pumps when considering the operability of the ballast system after the damage specified in paragraph 3.5.10.

4.10.5 The ballast system should be arranged and operated so as to prevent inadvertent transfer of ballast water from one tank or hull to another, which could result in moment shifts leading to excessive angles of heel or trim.

4.10.6 It should be possible to supply each ballast pump provided to meet paragraph 4.10.3 from the emergency source of power. The arrangements should be such that the system is capable of restoring the unit from an inclination specified in paragraph 4.1.4.1 to a level trim and safe draught condition after loss of any single component in the power supply system.

4.10.7 All ballast pipes should be of steel or other suitable material having properties acceptable to the Administration. Special consideration should be given to the design of ballast lines passing through ballast tanks, taking into account effects of corrosion or other deterioration.

4.10.8 All valves and operating controls should be clearly marked to identify the function they serve. Means should be provided locally to indicate whether a valve is open or closed.

4.10.9 Air pipes should be provided on each ballast tank sufficient in number and cross-sectional area to permit the efficient operation of the ballast pumping system under the conditions referred to in paragraphs 4.10.1 to 4.10.8. In order to allow deballasting of the ballast tanks intended to be used to bring the unit back to normal draught and to ensure no inclination after damage, air pipe openings for these tanks should be above the worst damage waterline specified in chapter 3. Such air pipes should be positioned outside the extent of damage, as defined in chapter 3.

Control and indicating systems

4.10.10 A central ballast control station should be provided. It should be located above the worst damage waterline and in a space not within the assumed extent of damage referred to in chapter 3 and adequately protected from weather. It should be provided with the following control and indicating systems, having appropriate audible and visual alarms, where applicable:

.1 ballast pump control system;

.2 ballast pump status-indicating system;

.3 ballast valve control system;

.4 ballast valve position-indicating system;

.5 tank level indicating system;

.6 draught indicating system;

.7 heel and trim indicators;

.8 power availability indicating system (main and emergency);

.9 ballast system hydraulic/pneumatic pressure-indicating system.

4.10.11 In addition to remote control of the ballast pumps and valves from the central ballast control station, all ballast pumps and valves should be fitted with independent local control operable in the event of remote control failure. The independent local control of each ballast pump and of its associated ballast tank valves should be in the same location.

4.10.12 The control and indicating systems listed in paragraph 4.10.10 should function independently of one another, or have sufficient redundancy, such that a failure in one system does not jeopardize the operation of any of the other systems.

4.10.13 Each power-actuated ballast valve should fail to the closed position upon loss of control power. Upon reactivation of control power, each such valve should remain closed until the ballast control operator assumes control of the reactivated system. The Administration may accept ballast valve arrangements that do not fail to the closed position upon loss of power provided the Administration is satisfied that the safety of the unit is not impaired.

4.10.14 The tank level indicating system under paragraph 4.10.10.5 should provide means to:

.1 indicate liquid levels in all ballast tanks. A secondary means of determining levels in ballast tanks, which may be a sounding pipe, should be provided. Tank level sensors should not be situated in the tank suction lines;

.2 indicate liquid levels in other tanks, such as fuel oil, fresh water, drilling water or liquid storage tanks, the filling or emptying of which, in the view of the Administration, could affect the stability of the unit. Tank level sensors should not be situated in the tank suction lines.

4.10.15 The draught indicating system should display the draught as measured at each corner of the unit or at representative positions as required by the Administration.

4.10.16 Enclosures housing ballast system electrical components, the failure of which would cause unsafe operation of the ballast system upon liquid entry into the enclosure, should comply with paragraph 5.6.21.

4.10.17 A means to indicate whether a valve is open or closed should be provided at each location from which the valve can be controlled. The indicators should rely on movement of the valve spindle, or be otherwise arranged with equivalent reliability.

4.10.18 Means should be provided at the central ballast control station to isolate or disconnect the ballast pump control and ballast valve control systems from their sources of electrical, pneumatic or hydraulic power.

Internal communication

4.10.19 A permanently installed means of communication, independent of the unit's main source of electrical power, should be provided between the central ballast control station and spaces that contain ballast pumps or valves, or other spaces that may contain equipment necessary for the operation of the ballast system.

4.11 Protection against flooding

4.11.1 Each seawater inlet and discharge in spaces below the assigned load line should be provided with a valve operable from an accessible position outside the space on:

.1 all column-stabilized units;

.2 all other units where the space containing the valve is normally unattended and is not provided with high bilge water level detection.

4.11.2 The control systems and indicators provided in paragraph 3.6.5.1 should be operable in both normal conditions and in the event of main power failure. Where stored energy is provided for this purpose, its capacity should be to the satisfaction of the Administration.

4.11.3 Non-metallic expansion joints in piping systems, if located in a system which penetrates the unit's side and both the penetration and the non-metallic expansion joint are located below the deepest load waterline, should be inspected as part of the dry-dock survey in section 1.6 and replaced as necessary, or at an interval recommended by the manufacturer.

4.12 Anchoring arrangements for surface and column-stabilized units[13]

4.12.1 Anchoring arrangements, where fitted as the sole means for position keeping, should be provided with adequate factors of safety and be designed to maintain the unit on station in all design conditions. The arrangements should be such that a failure of any single component should not cause progressive failure of the remaining anchoring arrangements.

[13] Refer to the Guidelines on anchoring systems for MODUs (MSC/Circ.737).

4.12.2 The anchors, cables, shackles and other associated connecting equipment should be designed, manufactured and tested in accordance with an internationally recognized standard for offshore mooring equipment. Documentation of testing, where applicable, should be maintained on board the unit. Provisions should be made on board for the recording of changes to and inspection of the equipment.

4.12.3 Anchor cables may be of wire, rope, chain or any combination thereof.

4.12.4 Means should be provided to enable the anchor cable to be released from the unit after loss of main power.

4.12.5 Fairleads and sheaves should be designed to prevent excessive bending and wear of the anchor cable. The attachments to the hull or structure should be such as to adequately withstand the stresses imposed when an anchor cable is loaded to its breaking strength.

4.12.6 Suitable anchor stowage arrangements should be provided to prevent movement of the anchors in a seaway.

4.12.7 Each windlass should be provided with two independent power-operated brakes. Each brake should be capable of holding against a static load in the anchor cable of at least 50% of its breaking strength. Where the Administration so allows, one of the brakes may be replaced by a manually operated brake.

4.12.8 The design of the windlass should provide for adequate dynamic braking capacity to control normal combinations of loads from the anchor, anchor cable and anchor handling vessel during the deployment of the anchors at the maximum design payout speed of the windlass.

4.12.9 On loss of power to the windlasses, the power-operated braking system should be automatically applied and be capable of holding against 50% of the total static braking capacity of the windlass.

4.12.10 Each windlass should be capable of being controlled from a position which provides a good view of the operation.

4.12.11 Means should be provided at the windlass control position to monitor cable tension and windlass power load and to indicate the amount of cable paid out.

4.12.12 A manned control station should be provided with means to indicate and automatically record cable tensions and the wind speed and direction.

4.12.13 Reliable means should be provided to communicate between locations critical to the anchoring operation.

4.12.14 Special consideration should be given to arrangements where the anchoring systems provided are used in conjunction with thrusters to maintain the unit on station.

4.13 Dynamic positioning systems[14]

Dynamic positioning systems used as a sole means of position keeping should provide a level of safety equivalent to that provided for anchoring arrangements.[15]

4.14 Elevating systems for self-elevating units

Machinery

4.14.1 Jacking mechanisms should be:

.1 arranged so that a single failure of any component does not cause an uncontrolled descent of the unit;

.2 designed and constructed for the maximum lowering and lifting loads of the unit as specified in the unit's operation manual in accordance with paragraph 14.1.2.8;

.3 able to withstand the forces imposed on the unit from the maximum environmental criteria for the unit; and

.4 constructed such that the elevation of the leg relative to the unit can be safely maintained in case of loss of power (e.g., electric, hydraulic, or pneumatic power).

Control, communication and alarms

4.14.2 The elevating system should be operable from a central jacking control station.

4.14.3 The jacking control station should have the following:

.1 audible and visual alarms for jacking system overload and out-of-level. Units whose jacking systems are subject to rack phase differential should also have audible and visual alarms for rack phase differential; and

.2 instrumentation to indicate:

.2.1 the inclination of the unit on two horizontal perpendicular axes;

.2.2 power consumption or other indicators for lifting or lowering the legs, as applicable; and

.2.3 brake release status.

4.14.4 A communication system should be provided between the central jacking control and a location at each leg.

---

[14] Refer to Guidance for dynamic position system (DP) operator training (MSC.1/Circ.738/Rev.1).

[15] Refer to the Guidelines for vessels with dynamic positioning systems (MSC/Circ.645).

CHAPTER 5

ELECTRICAL INSTALLATIONS FOR ALL TYPES OF UNITS

5.1 General

5.1.1 Electrical installations should be such that:

.1 all electrical services necessary for maintaining the unit in normal operational and habitable conditions will be assured without recourse to the emergency source of power;

.2 electrical services essential for safety will be assured in case of failure of the main source of electrical power;

.3 electromagnetic compatibility of electrical and electronic equipment is assured[16]; and

.4 the safety of personnel and unit from electrical hazards will be assured.

5.1.2 Administrations should take appropriate steps to ensure uniformity in the implementation and application of these provisions in respect of electrical installations.[17]

5.2 Alternative design and arrangements

When alternative design or arrangements deviate from the prescriptive provisions of the Code, an engineering analysis, evaluation and approval of the design and arrangements should be carried out in accordance with SOLAS regulation II-1/55 based on the guidelines developed by the Organization.[18]

5.3 Main source of electrical power

5.3.1 Every unit should be provided with a main source of electrical power which should include at least two generating sets.

5.3.2 The power of these sets should be such that it is still possible to ensure the functioning of the services referred to in paragraph 5.1.1.1, except for power servicing drilling operations, in the event of any one of these generating sets being stopped.

5.3.3 Where transformers or converters constitute an essential part of the supply system, the system should be so arranged as to ensure the same continuity of the supply as stated in paragraph 5.3.2.

5.3.4 A main electrical lighting system which should provide illumination throughout those parts of the unit normally accessible to and used by personnel should be supplied from the main source of power.

---

[16] Refer to General requirements for electromagnetic compatibility for all electrical and electronic equipment, adopted by the Organization by resolution A.813(19).

[17] Refer to the recommendations published by the International Electrotechnical Commission.

[18] Refer to the Guidelines on alternative design and arrangements for SOLAS chapters II-1 and III (MSC.1/Circ.1212).

5.3.5 The arrangement of the main lighting system should be such that a fire or other casualty in the space or spaces containing the main source of power, including transformers or converters, if any, will not render the emergency lighting system under section 5.4 inoperative.

5.3.6 The arrangement of the emergency lighting system should be such that a fire or other casualty in the space or spaces containing the emergency source of power, including transformers or converters, if any, will not render the main lighting system required by this section inoperative.

5.3.7 The main source of electrical power should comply with the following:

.1 Where the electrical power can normally be supplied by one generator, suitable load-shedding arrangements should be provided to ensure the integrity of supplies to services required for propulsion and steering as well as the safety of the unit. In the case of loss of the generator in operation, adequate provision should be made for automatic starting and connecting to the main switchboard of a stand-by generator of sufficient capacity to ensure safe navigation when underway and to ensure the safety of the unit with automatic restarting of the essential auxiliaries including, where necessary, sequential operations. The Administration may dispense with these provisions where the power necessary to ensure the functioning of the service referred to in paragraph 5.1.1.1, except for power servicing drilling operations, is 250 kW or less.

.2 If the electrical power is normally supplied by more than one generator simultaneously in parallel operation, provision should be made, for instance, by load shedding to ensure that, in case of loss of one of these generating sets, the remaining ones are kept in operation without overload to ensure safe navigation when underway and to ensure the safety of the unit.

.3 Where the main source of electrical power is necessary for propulsion of the unit, the main busbar should be subdivided into at least two parts which should normally be connected by circuit breakers or other approved means; so far as is practicable, the connection of generating sets and other duplicated equipment should be equally divided between the parts.

5.4 Emergency source of electrical power

5.4.1 Every unit should be provided with a self-contained emergency source of electrical power.

5.4.2 The emergency source of power, the transitional source of emergency power and the emergency switchboard should be located above the worst damage waterline and in a space not within the assumed extent of damage referred to in chapter 3, and be readily accessible. They should not be forward of the collision bulkhead, if any.

5.4.3 The location of the emergency source of power, the transitional source of emergency power and emergency switchboard in relation to the main source of electrical power should be such as to ensure to the satisfaction of the Administration that a fire or other casualty in the space containing the main source of electrical power or in any machinery space of category A will not interfere with the supply or distribution of emergency power. As far as practical, the space containing the emergency source of power, the transitional source of emergency power and the emergency switchboard should not be contiguous to boundaries of machinery spaces of category A or of those spaces containing the main source of electrical power. Where the

emergency source of power, the transitional source of emergency power, and the emergency switchboard are contiguous to the boundaries of machinery spaces of category A or to those spaces containing the main source of electrical power, or to spaces of zone 1 or zone 2, the contiguous boundaries should be in compliance with section 9.2.

5.4.4 Provided that suitable measures are taken for safeguarding independent emergency operation under all circumstances, the emergency switchboard may be used to supply non-emergency circuits, and the emergency generator may be used exceptionally and for short periods to supply non-emergency circuits.

5.4.5 For units where the main source of electrical power is located in two or more spaces which have their own systems, including power distribution and control systems, completely independent of the systems in the other spaces and such that a fire or other casualty in any one of the spaces will not affect the power distribution from the others, or to the services under paragraph 5.4.6, the provisions of paragraph 5.4.1 may be considered satisfied without an additional emergency source of electrical power, provided that the Administration is satisfied that:

.1 there are at least two generating sets, meeting the provisions of paragraph 5.4.15 and each of sufficient capacity to meet the provisions of paragraph 5.4.6, in each of at least two spaces;

.2 the arrangements under paragraph 5.4.5.1 in each such space are equivalent to those under paragraphs 5.4.8 and 5.4.11 to 5.4.14 and section 5.5 so that a source of electrical power is available at all times to the services under paragraph 5.4.6;

.3 the location of each of the spaces referred to in paragraph 5.4.5.1 is in compliance with paragraph 5.4.2 and the boundaries meet the provisions of paragraph 5.4.3 except that contiguous boundaries should consist of an “A-60” bulkhead and a cofferdam, or a steel bulkhead insulated to class “A-60” on both sides.

5.4.6 The power available should be sufficient to supply all those services that are essential for safety in an emergency, due regard being paid to such services as may have to be operated simultaneously. The emergency source of power should be capable, having regard to starting currents and the transitory nature of certain loads, of supplying simultaneously at least the following services for the periods specified hereinafter, if they depend upon an electrical source for their operation:

.1 For a period of 18 h, emergency lighting:

.1.1 at every embarkation station on deck and over sides;

.1.2 in all service and accommodation alleyways, stairways and exits, personnel lift cars, and personnel lift trunks;

.1.3 in the machinery spaces and main generating stations including their control positions;

.1.4 in all control stations and in all machinery control rooms;

.1.5 in all spaces from which control of the drilling process is performed and where controls of machinery essential for the performance of this process, or devices for emergency switching-off of the power plant are located;

.1.6 at the stowage position or positions for fire-fighters' outfits;

.1.7 at the sprinkler pump, if any, at the fire pump referred to in paragraph 5.4.6.5, at the emergency bilge pump, if any, and at their starting positions;

.1.8 on helidecks, to include perimeter and helideck status lights, wind direction indicator illumination, and related obstruction lights, if any;

.2 For a period of 18 h, the navigation lights, other lights and sound signals, required by the International Regulations for the Prevention of Collisions at Sea, in force;

.3 For a period of four days signalling lights and sound signals required for marking of offshore structures;

.4 For a period of 18 h:

.4.1 all internal communication equipment that is required in an emergency;

.4.2 fire and gas detection and their alarm systems;

.4.3 intermittent operation of the manual fire alarms and all internal signals that are required in an emergency; and

.4.4 the capability of closing the blow-out preventer and of disconnecting the unit from the well-head arrangement, if electrically controlled;

unless they have an independent supply from an accumulator battery suitably located for use in an emergency and sufficient for the period of 18 h;

.5 For a period of 18 h, one of the fire pumps, if dependent upon the emergency generator for its source of power;

.6 For a period of at least 18 h, permanently installed diving equipment, if dependent upon the unit's electrical power;

.7 On column-stabilized units, for a period of 18 h:

.7.1 ballast control and indicating systems under paragraph 4.10.10; and

.7.2 any of the ballast pumps under paragraph 4.10.3; only one of the connected pumps need be considered to be in operation at any time;

.8 For a period of half an hour:

.8.1 power to operate the watertight doors as provided under paragraph 3.6.5.1, but not necessarily all of them simultaneously, unless an independent temporary source of stored energy is provided; and

.8.2 power to operate the controls and indicators provided under paragraph 3.6.5.1.

5.4.7 The emergency source of power may be either a generator or an accumulator battery.

5.4.8 Where the emergency source of power is a generator it should be:

.1 driven by a suitable prime mover with an independent supply of fuel, having a flashpoint of not less than 43°C;

.2 started automatically upon failure of the normal electrical supply unless a transitional source of emergency power in accordance with paragraph 5.4.8.3 is provided; where the emergency generator is automatically started, it should be automatically connected to the emergency switchboard; those services referred to in paragraph 5.4.10 should then be connected automatically to the emergency generator; and unless a second independent means of starting the emergency generator is provided, the single source of stored energy should be protected to preclude its complete depletion by the automatic starting system; and

.3 provided with a transitional source of emergency power, as specified in paragraph 5.4.10, unless the emergency generator is capable of supplying the services mentioned in paragraph 5.4.10 and of being automatically started and supplying the required load as quickly as is safe and practicable but in not more than 45 s.

5.4.9 Where the emergency source of power is an accumulator battery it should be capable of:

.1 carrying the emergency load without recharging while maintaining the voltage of the battery throughout the discharge period within plus or minus 12% of its nominal voltage;

.2 automatically connecting to the emergency switchboard in the event of failure of the main power supply; and

.3 immediately supplying at least those services specified in paragraph 5.4.10.

5.4.10 The transitional source or sources of emergency power, under paragraph 5.4.8.3, should consist of an accumulator battery suitably located for use in an emergency, which should operate without recharging whilst maintaining the voltage of the battery throughout the discharge period within plus or minus 12% of its nominal voltage, and be of sufficient capacity and so arranged as to supply automatically, in the event of failure of either the main or the emergency source of power, the following services for half an hour at least if they depend upon an electrical source for their operation:

.1 the lighting under paragraphs 5.4.6.1 and 5.4.6.2. For this transitional phase, the required emergency lighting, in respect of the machinery space and accommodation and service areas, may be provided by permanently fixed, individual accumulator lamps which are automatically charged and operated;

.2 all essential internal communication equipment under paragraphs 5.4.6.4.1 and 5.4.6.4.2; and

.3 intermittent operation of the services referred to in paragraphs 5.4.6.4.3 and 5.4.6.4.4,

unless, in the case of paragraphs 5.4.10.2 and 5.4.10.3, they have an independent supply from an accumulator battery suitably located for use in an emergency and sufficient for the period specified.

5.4.11 The emergency switchboard should be installed as near as is practicable to the emergency source of power and, where the emergency source of power is a generator, the emergency switchboard should preferably be located in the same space.

5.4.12 No accumulator battery fitted to meet the provisions for emergency or transitional power supply should be installed in the same space as the emergency switchboard, unless appropriate measures to the satisfaction of the Administration are taken to extract the gases discharged from the said batteries. An indicator should be mounted in a suitable place on the main switchboard or in the machinery control room to indicate when the batteries constituting either the emergency source of power or the transitional source of power, referred to in paragraphs 5.4.9 or 5.4.10, are being discharged.

5.4.13 The emergency switchboard should be supplied in normal operation from the main switchboard by an interconnector feeder which should be adequately protected at the main switchboard against overload and short circuit. The arrangement at the emergency switchboard should be such that the interconnector feeder is disconnected automatically at the emergency switchboard upon failure of the main power supply. Where the system is arranged for feedback operation, the interconnector feeder should also be protected at the emergency switchboard at least against short circuit.

5.4.14 In order to ensure ready availability of emergency supplies, arrangements should be made where necessary to disconnect non-emergency circuits automatically from the emergency switchboard to ensure that power is available automatically to the emergency circuits.

5.4.15 The emergency generator and its prime mover and any emergency accumulator battery should be designed to function at full rated power when upright and when inclined up to the maximum angle of heel in the intact and damaged condition, as determined in accordance with chapter 3. In no case need the equipment be designed to operate when inclined more than:

.1 25° in any direction on a column-stabilized unit;

.2 15° in any direction on a self-elevating unit; and

.3 22.5° about the longitudinal axis and/or when inclined 10° about the transverse axis on a surface unit.

5.4.16 Provision should be made for the periodic testing of the complete emergency system. This should include the testing of transitional sources and automatic starting arrangements.

5.5 Starting arrangements for emergency generators

5.5.1 Emergency generators should be capable of being readily started in their cold condition down to a temperature of 0°C. If this is impracticable, or if lower temperatures are likely to be encountered, consideration should be given to the provision and maintenance of heating arrangements, acceptable to the Administration, so that ready starting will be assured.

5.5.2 Each emergency generator which is arranged to be automatically started should be equipped with starting arrangements acceptable to the Administration with a storage energy capability of at least three consecutive starts. A second source of energy should be provided for an additional three starts within 30 min unless hand (manual) starting can be demonstrated to be effective.

5.5.3 Provision should be made to maintain the stored energy at all times.

5.5.4 Electrical and hydraulic starting systems should be maintained from the emergency switchboard.

5.5.5 Compressed air starting systems may be maintained by the main or auxiliary compressed air receivers, through a suitable non-return valve or by an emergency air compressor energized by the emergency switchboard.

5.5.6 All of these starting, charging and energy storing devices should be located in the emergency generator room; these devices should not be used for any purpose other than the operation of the emergency generator set. This does not preclude the supply to the air receiver of the emergency generator set from the main or auxiliary compressed air system through a non-return valve fitted in the emergency generator room.

5.5.7 When automatic starting is not required by these provisions and where it can be demonstrated as being effective, hand (manual) starting is permissible, such as manual cranking, inertia starters, manual hydraulic accumulators, or powder cartridges.

5.5.8 When hand (manual) starting is not practicable, the provisions in paragraphs 5.5.2 and 5.5.3 to 5.5.6 should be complied with, except that starting may be manually initiated.

5.6 Precautions against shock, fire and other hazards of electrical origin

5.6.1 Exposed metal parts of electrical machines or equipment which are not intended to be live but which are liable under fault conditions to become live should be earthed (grounded) unless the machines or equipment are:

.1 supplied at a voltage not exceeding 55 V direct current or 55 V, root mean square between conductors; auto-transformers should not be used for the purpose of achieving this voltage; or

.2 supplied at a voltage not exceeding 250 V by safety isolating transformers supplying only one consuming device; or

.3 constructed in accordance with the principle of double insulation.

5.6.2 The Administration may require additional precautions for portable electrical equipment for use in confined or exceptionally damp spaces where particular risks due to conductivity may exist.

5.6.3 All electrical apparatus should be so constructed and so installed that it does not cause injury when handled or touched in the normal manner.

5.6.4 Where not obtained through normal construction, arrangements should be provided to effectively earth (ground) all permanently installed machinery, metal structures of derricks, masts and helicopter decks.

5.6.5 Switchboards should be so arranged as to give easy access, where needed, to apparatus and equipment, in order to minimize danger to personnel. The sides and backs and, where necessary, the fronts of switchboards should be suitably guarded. Exposed live parts having voltages to earth (ground) exceeding a voltage to be specified by the Administration should not be installed on the front of such switchboards. There should be non-conducting mats or gratings at the front and rear, where necessary.

5.6.6 Distribution systems with hull return should not be installed, but this does not preclude, under conditions approved by the Administration, the installation of:

.1 impressed current cathodic protective systems;

.2 limited and locally earthed systems (e.g., engine starting systems);

.3 limited and locally earthed welding systems; where the Administration is satisfied that the equipotential of the structure is assured in a satisfactory manner, welding systems with hull return may be installed without this restriction; and

.4 insulation level monitoring devices provided the circulation current does not exceed 30 mA under the most unfavourable conditions.

5.6.7 When a distribution system, whether primary or secondary, for power, heating or lighting, with no connection to earth is used, a device capable of continuously monitoring the insulation level to earth and of giving an audible or visual indication of abnormally low insulation values should be provided.

5.6.8 Except as permitted by the Administration in exceptional circumstances, all metal sheaths and armour of cables should be electrically continuous and should be earthed (grounded).

5.6.9 All electric cables and wiring external to equipment should be at least of a flame-retardant type and should be so installed as not to impair their original flame-retarding properties.[19] Where necessary for particular applications, the Administration may permit the use of special types of cables such as radio frequency cables, which do not comply with the foregoing.

5.6.10 Cables and wiring serving essential or emergency power, lighting, internal communications or signals should, so far as practicable, be routed clear of galleys, machinery spaces of category A and their casings and other high fire risk areas. Cables connecting fire pumps to the emergency switchboard should be of a fire-resistant type where they pass through high fire risk areas. Where practicable all such cables should be run in such a manner as to preclude their being rendered unserviceable by heating of the bulkheads that may be caused by a fire in an adjacent space.[19]

5.6.11 Cables and wiring should be installed and supported in such a manner as to avoid chafing or other damage.

---

[19] Refer to the recommendations published by the International Electrotechnical Commission concerning flame-retarding properties of bunched cables and characteristics of cables of a fire-resistant type.

5.6.12 Terminations and joints in all conductors should be so made that they retain the original electrical, mechanical, flame-retarding and, where necessary, fire-resisting properties of the cable.

5.6.13 Each separate circuit should be protected against short circuit and against overload, except as permitted in section 7.6, or where the Administration may exceptionally otherwise permit.

5.6.14 The rating or appropriate setting of the overload protection device for each circuit should be permanently indicated at the location of the protection device.

5.6.15 Lighting fittings should be so arranged as to prevent temperature rises which could damage the cables and wiring, and to prevent surrounding material from becoming excessively hot.

5.6.16 Accumulator batteries should be suitably housed, and compartments used primarily for their accommodation should be properly constructed and efficiently ventilated.

5.6.17 Electrical or other equipment which may constitute a source of ignition of flammable vapours should not be permitted in these compartments except as permitted in paragraph 5.6.19.

5.6.18 Accumulator batteries, except for batteries of self-contained battery-operated lights, should not be located in sleeping quarters. Administrations may grant exemptions from or equivalencies to this provision where hermetically sealed batteries are installed.

5.6.19 In paint lockers, acetylene stores, and similar spaces where flammable mixtures are liable to collect as well as any compartment assigned principally to accumulator batteries, no electrical equipment should be installed unless the Administration is satisfied that such equipment is:

.1 essential for operational purposes;

.2 of a type which will not ignite the mixture concerned;

.3 appropriate to the space concerned; and

.4 appropriately certified for safe usage in the vapours or gases likely to be encountered.

5.6.20 Electrical apparatus and cables should, where practicable, be excluded from any compartment in which explosives are stored. Where lighting is required, the light should come from outside, through the boundaries of the compartment. If electrical equipment cannot be excluded from such a compartment it should be so designed and used as to minimize the risk of fire or explosion.

5.6.21 Where spilling or impingement of liquids could occur upon any electrical control or alarm console, or similar electrical enclosure essential to the safety of the unit, such equipment should have suitable protection against the ingress of liquids.[20]

[20] Refer to IEC 60529 – Degrees of protection provided by enclosures (IP Code). Other arrangements for the enclosures of electrical components may be fitted provided the Administration is satisfied that an equivalent protection is achieved.

5.7 Alarms and internal communication

5.7.1 Alarms and indicators should be installed in accordance with the recommendations of the Organization.[21]

5.7.2 Each unit should be provided with a general alarm system so installed as to be clearly perceptible in all normally accessible parts of the unit, including open decks. Control stations for activating the alarm should be installed to the satisfaction of the Administration. The signals used should be limited to: general emergency, toxic gas (hydrogen sulphide), combustible gas, fire alarm, and abandon unit signals. These signals should be described in the muster list and operations manual.

5.7.3 A public address system should be provided. The system should be clearly audible in all spaces that are normally accessible to personnel during routine operations. It should be possible to make announcements at the following locations (if provided): Emergency response centre, navigation bridge, engine control room, ballast control station, jacking control station, and a location near the drilling console.

5.7.4 The signals given over the general alarm system should be supplemented by instructions over the public address system.

5.7.5 Internal means of communication should be available for transfer of information between all spaces where action may be necessary in case of an emergency.

5.7.6 Audible signals in high noise areas should be supplemented with visual signals. Internal means of communication should be available for transfer of information between all spaces where action may be necessary in case of an emergency.

[21] Refer to the Code on Alerts and Indicators, 2009, adopted by the Organization by resolution [A…(26)].

CHAPTER 6

MACHINERY AND ELECTRICAL INSTALLATIONS IN HAZARDOUS AREAS FOR ALL TYPES OF UNITS

6.1 Zones[22]

Hazardous areas are divided into zones as follows:

Zone 0: in which ignitable concentrations of flammable gases or vapours are continuously present or present for long periods.

Zone 1: in which ignitable concentrations of flammable gases or vapours are likely to occur in normal operation.

Zone 2: in which ignitable concentrations of flammable gases or vapours are not likely to occur, or in which such a mixture, if it does occur, will only exist for a short time.

6.2 Classification of hazardous areas[23]

6.2.1 For the purpose of machinery and electrical installations, hazardous areas are classified as in paragraphs 6.2.2 to 6.2.4. Hazardous areas not covered (such as, but not limited to, well test equipment areas, helicopter fuel storage areas, acetylene cylinder storage areas, battery rooms, paint lockers, flammable gas or vapour vents and diverter line outlets) in this section should be classified in accordance with section 6.1.

6.2.2 *Hazardous areas zone 0*

The internal spaces of closed tanks and piping for containing active non-degassed drilling mud, oil that has a closed-cup flashpoint below 60°C or flammable gas and vapour, as well as produced oil and gas in which an oil/gas/air mixture is continuously present or present for long periods.

6.2.3 *Hazardous areas zone 1*

.1 Enclosed spaces containing any part of the mud circulating system that has an opening into the spaces and is between the well and the final degassing discharge.

.2 Enclosed spaces or semi-enclosed locations that are below the drill floor and contain a possible source of release such as the top of a drilling nipple.

.3 Outdoor locations below the drill floor and within a radius of 1.5 m from a possible source of release such as the top of a drilling nipple.

---

[22] Refer to standard IEC 60079-10: 2002 Electrical apparatus for explosive gas atmospheres – Part 10: Classification of hazardous areas.

[23] The identification and extent of hazardous areas in this chapter have been determined taking into account current practice.

.4 Enclosed spaces that are on the drill floor and which are not separated by a solid floor from the spaces in paragraph 6.2.3.2.

.5 In outdoor or semi-enclosed locations, except as provided for in paragraph 6.2.3.2, the area within 1.5 m from the boundaries of any openings to equipment which is part of the mud system as specified in paragraph 6.2.3.1, any ventilation outlets of zone 1 spaces, or any access to zone 1 spaces.

.6 Pits, ducts or similar structures in locations which would otherwise be zone 2 but which are so arranged that dispersion of gas may not occur.

6.2.4 ***Hazardous areas zone 2***

.1 Enclosed spaces which contain open sections of the mud circulating system from the final degassing discharge to the mud pump suction connection at the mud pit.

.2 Outdoor locations within the boundaries of the drilling derrick up to a height of 3 m above the drill floor.

.3 Semi-enclosed locations below and contiguous to the drill floor and to the boundaries of the derrick or to the extent of any enclosure which is liable to trap gases.

.4 In outdoor locations below the drill floor, within a radius of 1.5 m area beyond the zone 1 area as specified in paragraph 6.2.3.3.

.5 The areas 1.5 m beyond the zone 1 areas specified in paragraph 6.2.3.5 and beyond the semi-enclosed locations specified in paragraph 6.2.3.2.

.6 Outdoor areas within 1.5 m of the boundaries of any ventilation outlet from or access to a zone 2 space.

.7 Semi-enclosed derricks to the extent of their enclosure above the drill floor or to a height of 3 m above the drill floor, whichever is greater.

.8 Air locks between a zone 1 and a non-hazardous area.

6.3 Openings, access and ventilation conditions affecting the extent of hazardous areas

6.3.1 Except for operational reasons, access doors or other openings should not be provided between a non-hazardous space and a hazardous area or between a zone 2 space and a zone 1 space. Where such access doors or other openings are provided, any enclosed space not referred to under paragraph 6.2.3 or 6.2.4 and having a direct access to any zone 1 location or zone 2 location becomes the same zone as the location except that:

.1 an enclosed space with direct access to any zone 1 location can be considered as zone 2 if:

.1.1 the access is fitted with a self-closing gastight door opening into the zone 2 space,

.1.2 ventilation is such that the air flow with the door open is from the zone 2 space into the zone 1 location, and

.1.3 loss of ventilation is alarmed at a manned station;

.2 an enclosed space with direct access to any zone 2 location is not considered hazardous if:

.2.1 the access is fitted with a self-closing gastight door that opens into the non-hazardous location,

.2.2 ventilation is such that the air flow with the door open is from the non-hazardous space into the zone 2 location, and

.2.3 loss of ventilation is alarmed at a manned station;

.3 an enclosed space with direct access to any zone 1 location is not considered hazardous if:

.3.1 the access is fitted with two self-closing gastight doors forming an airlock,

.3.2 the space has ventilation overpressure in relation to the hazardous space, and

.3.3 loss of ventilation overpressure is alarmed at a manned station.

Where ventilation arrangements of the intended safe space are considered sufficient by the Administration to prevent any ingress of gas from the zone 1 location, the two self-closing doors forming an airlock may be replaced by a single self-closing gastight door which opens into the non-hazardous location and has no hold-back device.

6.3.2 Piping systems should be designed to preclude direct communication between hazardous areas of different classifications and between hazardous and non-hazardous areas.

6.3.3 Hold-back devices should not be used on self-closing gastight doors forming hazardous area boundaries.

6.4 Ventilation of hazardous spaces

6.4.1 Hazardous enclosed spaces should be adequately ventilated. Hazardous enclosed mud processing spaces should be ventilated at a minimum rate of 12 air changes per hour. Where mechanical ventilation is applied it should be such that the hazardous enclosed spaces are maintained with underpressure in relation to the less hazardous spaces or areas and non-hazardous enclosed spaces are maintained in overpressure in relation to adjacent hazardous locations.

6.4.2 All air inlets for hazardous enclosed spaces should be located in non-hazardous areas.

6.4.3 Each air outlet should be located in an outdoor area which, in the absence of the considered outlet, is of the same or lesser hazard than the ventilated space.

6.4.4 Where the ventilation duct passes through a hazardous area of a higher level, the ventilation duct should have overpressure in relation to this area; where the ventilation duct passes through a hazardous area of a lower level, the ventilation duct should have underpressure in relation to this area.

6.4.5 Ventilation systems for hazardous spaces should be independent from those for non-hazardous spaces.

6.5 Emergency conditions due to drilling operations

6.5.1 In view of exceptional conditions in which the explosion hazard may extend outside the above-mentioned zones, special arrangements should be provided to facilitate the selective disconnection or shutdown of:

.1 ventilation systems, except fans necessary for supplying combustion air to prime movers for the production of electrical power;

.2 main generator prime movers, including the ventilation systems for these;

.3 emergency generator prime movers.

6.5.2 In the case of units using dynamic positioning systems as a sole means of position keeping, special consideration may be given to the selective disconnection or shutdown of machinery and equipment associated with maintaining the operability of the dynamic positioning system in order to preserve the integrity of the well.

6.5.3 Disconnection or shutdown should be possible from at least two strategic locations, one of which should be outside hazardous areas.

6.5.4 Shutdown systems that are provided to comply with paragraph 6.5.1 should be so designed that the risk of unintentional stoppages caused by malfunction in a shutdown system and the risk of inadvertent operation of a shutdown are minimized.

6.5.5 Equipment which is located in spaces other than enclosed spaces and which is capable of operation after shutdown as given in paragraph 6.5.1 should be suitable for installation in zone 2 locations. Such equipment which is located in enclosed spaces should be suitable for its intended application to the satisfaction of the Administration. At least the following facilities should be operable after an emergency shutdown:

.1 emergency lighting under paragraphs 5.4.6.1.1 to 5.4.6.1.4 for half an hour;

.2 blow-out preventer control system;

.3 general alarm system;

.4 public address system; and

.5 battery-supplied radiocommunication installations.

6.6 Electrical installations in hazardous areas

6.6.1 Electrical equipment and wiring installed in hazardous areas should be limited to that necessary for operational purposes. Only the cables and types of equipment described in this chapter may be installed. Selection and installation of equipment and cables in hazardous areas should be in accordance with international standards.[24]

6.6.2 In selection of electrical apparatus for use in hazardous areas, consideration should be given to:

.1 the zone in which the apparatus will be used;

.2 the sensitivity to ignition of the gases or vapours likely to be present, expressed as a gas group; and

.3 the sensitivity of the gases or vapours likely to be present to ignition by hot surfaces, expressed as a temperature classification.

6.6.3 Electrical apparatus used in hazardous areas should be manufactured, tested, marked and installed in accordance with international standards[25] and certified by an independent testing laboratory recognized by the Administration. Equipment classified in accordance with the following protection classes may be used:

---

[24] Refer to the following recommendations published by the International Electrotechnical Commission:

IEC 61892-1:2001 Mobile and fixed offshore units – Electrical installations – Part 1: General requirements and conditions.
IEC 61892-2:2005 Mobile and fixed offshore units – Electrical installations – Part 2: System design.
IEC 61892-3:2007 Mobile and fixed offshore units – Electrical installations – Part 3: Equipment.
IEC 61892-4:2007 Mobile and fixed offshore units – Electrical installations – Part 4: Cables.
IEC 61892-5:2000 Mobile and fixed offshore units – Electrical Installations – Part 5: Mobile units.
IEC 61892-6:2007 Mobile and fixed offshore units – Electrical installations – Part 6: Installation.
IEC 61892-7:2007 Mobile and fixed offshore units – Electrical installations – Part 7: Hazardous areas.

[25] Refer to the following recommendations published by the International Electrotechnical Commission:

IEC 60079-4: 1975 Electrical apparatus for explosive gas atmospheres – Part 4: Method of test for ignition temperature.
IEC 60079-4A: 1970 Electrical apparatus for explosive gas atmospheres – Part 4: Method of test for ignition temperature – First supplement.
IEC 60079-10: 2002 Electrical apparatus for explosive gas atmospheres – Part 10: Classification of hazardous areas.
IEC/TR 60079-12: 1978 Electrical apparatus for explosive gas atmospheres – Part 12: Classification of mixtures of gases of vapours with air according to their maximum experimental safe gaps and minimum igniting currents.
IEC/TR 60079-13: 1982-01 Electrical apparatus for explosive gas atmosphere – Part 13: Construction and use of rooms or buildings protected by pressurization.
IEC 60079-14: 2007-12 Explosive atmospheres – Part 14: Electrical installations design, selection and erection.
IEC/TR 60079-16: 1990 Electrical apparatus for explosive gas atmospheres – Part 16: Artificial ventilation for the protection of analyser(s) houses.
IEC 60079-17: 2007 Explosive atmospheres – Part 17: Electrical installations inspection and maintenance.
IEC 60079-19: 2006-10 Explosive atmospheres – Part 19: Equipment repair, overhaul and reclamation.

(*continued on next page*)

Table 6-1 – Electrical protection type

Type	Protection method
ia and ib	Intrinsic safety
d	Flameproof enclosures
e	Increased safety
m	Encapsulation
n	Non incendive
o	Oil immersion
p	Pressurized enclosures
q	Powder filling
s	Special[26]

6.6.4 Types of electrical equipment permitted should be determined according to the electrical hazardous area classification of the location in which the equipment is to be installed. Permissible equipment is shown by an "x" in table 6-2. The use of type "o" (oil immersion) should be limited. For transportable apparatus, protection type "o" should not be used.

Table 6-2 – Type of electrical apparatus used in hazardous zones

Protection Type	ia	ib	d	e	m	n	o	p	q	s
Zone 0	x									
Zone 1	x	x	x	x	x		x	x	x	
Zone 2	x	x	x	x	x	x	x	x	x	x

(*continued from previous page*)

IEC/TR 60079-20: 1996 Electrical apparatus for explosive gas atmospheres – Part 20: Data for flammable gases and vapours, relating to the use of electrical apparatus.

IEC 60079-25: 2003 Electrical apparatus for explosive gas atmospheres – Part 25: Intrinsically safe systems.

IEC 60079-27: 2008 Explosive atmospheres – Part 27: Fieldbus intrinsically safe concept (FISCO).

IEC 60079-28: 2006 Explosive atmospheres – Part 28: Protection of equipment and transmission systems using optical radiation.

IEC 60079-29-1: 2007 Explosive atmospheres – Part 29-1: Gas detectors – Performance requirements of detectors for flammable gases.

IEC 60079-29-2: 2007 Explosive atmospheres – Part 29-2: Gas detectors – Selection, installation, use and maintenance of detectors for flammable gases and oxygen.

IEC 60079-30-1: 2007 Explosive atmospheres – Part 30-1: Electrical resistance trace heating – General and testing requirements.

IEC 60079-30-2: 2007 Explosive atmospheres – Part 30-2: Electrical resistance trace heating – Application guide for design, installation and maintenance.

[26] Equipment specially approved for use in this zone by an organization recognized by the Administration.

6.6.5 Group selection for electrical equipment should be as follows:

.1 Group II should be selected for types “e”, “m”, “n”, “o”, “p”, “q” and “s” apparatus.

.2 Group IIA, IIB or IIC should be selected for types “i”, “d”, and certain types of “n” apparatus according to table 6-3.

Table 6-3 – Relationship between gas/vapour group and permitted equipment group

Gas/vapour group	Electrical equipment group
IIC	IIC
IIB	IIB or IIC
IIA	IIA, IIB or IIC

6.6.6 Electrical apparatus should be so selected that its maximum surface temperature will not reach ignition temperature of any gas/vapour possibly presenting in the hazardous areas in which the electrical apparatus is located. The relationship among equipment temperature class, equipment maximum surface temperature, gas/vapour ignition temperature is shown in table 6-4.

Table 6-4 – Relationship among temperature class, maximum surface temperature and ignition temperature

Electrical apparatus Temperature class	Electrical apparatus maximum surface temperature (°C)	Gas/vapour ignition temperature (°C)
T1	450	>450
T2	300	>300
T3	200	>200
T4	135	>135
T5	100	>100
T6	85	>85

6.6.7 Electrical apparatus located in hazardous drilling well and mud processing areas should meet at least Group IIA and temperature class T3.

6.6.8 Electrical cables should meet the following:

.1 Only cables associated with type “ia” equipment should be permitted in zone 0 areas.

.2 Thermoplastic sheathed cables, thermosetting sheathed cables or elastomeric sheathed cables should be used for fixed wiring in zone 2 areas.

.3 Flexible and portable cables, where necessary, used in zone 1 and zone 2 areas should be to the satisfaction of the Administration.

.4 Permanently installed, fixed cable passing through zone 1 hazardous areas should be fitted with conductive covering, braiding or sheathed for earth detection.

6.7 Machinery installations in hazardous areas

6.7.1 Mechanical equipment should be limited to that necessary for operational purposes.

6.7.2 Mechanical equipment and machinery in hazardous areas should be so constructed and installed as to reduce the risk of ignition from sparking due to the formation of static electricity or friction between moving parts and from high temperatures of exposed parts due to exhausts or other emissions.

6.7.3 The installation of internal combustion machinery may be permitted in zone 1 and zone 2 hazardous areas, provided that the Administration is satisfied that sufficient precautions have been taken against the risk of dangerous ignition.

6.7.4 The installation of fired equipment may be permitted in zone 2 hazardous areas, provided that the Administration is satisfied that sufficient precaution has been taken against the risk of dangerous ignition.

CHAPTER 7

MACHINERY AND ELECTRICAL INSTALLATIONS FOR SELF-PROPELLED UNITS

7.1 General

7.1.1 The provisions of this chapter apply to units which are designed to undertake self-propelled passages without external assistance and are not applicable to units which are fitted only with means for the purpose of positioning or of assistance in towing operations. These provisions are additional to those in chapters 4, 5 and 6.

7.1.2 Means should be provided whereby normal operation of propulsion machinery can be sustained or restored even though one of the essential auxiliaries becomes inoperative. Special consideration should be given to the malfunction of:

.1 a generator set which serves as a main source of electrical power;

.2 the sources of steam supply;

.3 the arrangements for boiler feedwater;

.4 the arrangements which supply fuel oil for boilers or engines;

.5 the sources of lubricating oil pressure;

.6 the sources of water pressure;

.7 a condensate pump and the arrangements to maintain vacuum in condensers;

.8 the mechanical air supply for boilers;

.9 an air compressor and receiver for starting or control purposes; and

.10 the hydraulic, pneumatic or electrical means for control in main propulsion machinery including controllable-pitch propellers.

However, the Administration, having regard to overall safety considerations, may accept a partial reduction in capability from full normal operation.

7.1.3 Main propulsion machinery and all auxiliary machinery essential to the propulsion and the safety of the unit should, as fitted in the unit, be capable of operating under the static conditions under paragraph 4.1.4 and the following dynamic conditions:

.1 column-stabilized units 22.5° in any direction;

.2 self-elevating units 15° in any direction;

.3 surface units 22.5° rolling and simultaneously pitching 7.5° by bow or stern.

The Administration may permit deviation from these angles, taking into consideration the type, size and service conditions of the unit.

7.1.4 Special consideration should be given to the design, construction and installation of propulsion machinery systems so that any mode of their vibrations should not cause undue stresses in this machinery in the normal operating ranges.

7.2 Means of going astern

7.2.1 Units should have sufficient power for going astern to secure proper control of the unit in all normal circumstances.

7.2.2 The ability of the machinery to reverse the direction of thrust of the propeller in sufficient time and so to bring the unit to rest within a reasonable distance from maximum ahead service speed should be demonstrated.

7.2.3 The stopping times, unit headings and distances recorded on trials, together with the results of trials to determine the ability of units having multiple propellers to navigate and manoeuvre with one or more propellers inoperative, should be available on board for the use of the master or other designated personnel.[27]

7.2.4 Where the unit is provided with supplementary means for manoeuvring or stopping, these should be demonstrated and recorded as referred to in paragraphs 7.2.2 and 7.2.3.

7.3 Steam boilers and boiler feed systems

7.3.1 Water tube boilers serving turbine propulsion machinery should be fitted with a high-water-level alarm.

7.3.2 Every steam generating system which provides services essential for the propulsion of the unit should be provided with not less than two separate feedwater systems from and including the feed pumps, noting that a single penetration of the steam drum is acceptable. Means should be provided which will prevent overpressure in any part of the systems.

7.4 Machinery controls

7.4.1 Main and auxiliary machinery essential for the propulsion of the unit should be provided with effective means for its operation and control. All control systems essential for the propulsion, control and safety of the unit should be independent or designed such that failure of one system does not degrade the performance of another system. A pitch indicator should be provided on the navigating bridge for controllable-pitch propellers.

7.4.2 Where remote control of propulsion machinery from the navigating bridge is provided and the machinery spaces are intended to be manned, the following should apply:

.1 the speed, direction of thrust and, if applicable, the pitch of the propeller should be fully controllable from the navigating bridge under all sailing conditions, including manoeuvring;

[27] Refer to the Recommendation on the provision and display of manoeuvring information on board ships, adopted by the Organization by resolution A.601(15).

.2 the remote control should be performed, for each independent propeller, by a control device so designed and constructed that its operation does not require particular attention to the operational details of the machinery. Where more than one propeller is designed to operate simultaneously, these propellers may be controlled by one control device;

.3 the main propulsion machinery should be provided with an emergency stopping device on the navigating bridge and independent from the bridge control system;

.4 propulsion machinery orders from the navigating bridge should be indicated in the main machinery control station or at the manoeuvring platform as appropriate;

.5 remote control of the propulsion machinery should be possible from only one station at a time; at one control station interconnected control units are permitted. There should be at each station an indicator showing which station is in control of the propulsion machinery. The transfer of control between navigating bridge and machinery spaces should be possible only in the machinery space or machinery control room;

.6 it should be possible to control the propulsion machinery locally, even in the case of failure in any part of the remote control system;

.7 the design of the remote control system should be such that in case of its failure an alarm will be given and the preset speed and direction of thrust be maintained until local control is in operation, unless the Administration considers it impracticable;

.8 indicators should be fitted on the navigating bridge for:

.8.1 propeller speed and direction in case of fixed-pitch propellers;

.8.2 propeller speed and pitch position in case of controllable-pitch propellers;

.9 an alarm should be provided at the navigating bridge and in the machinery space to indicate low starting air pressure set at a level which still permits main engine starting operations. If the remote control system of the propulsion machinery is designed for automatic starting, the number of automatic consecutive attempts which fail to produce a start should be limited to safeguard sufficient starting air pressure for starting locally; and

.10 automation systems should be designed in a manner which ensures a threshold warning of impending or imminent slowdown or shutdown of the propulsion system is given to the officer in charge of the navigational watch in time to assess navigational circumstances in an emergency. In particular, the systems should control, monitor, report, alert and take safety action to slow down or stop propulsion while providing the officer in charge of the navigational watch an opportunity to manually intervene, except for those cases where manual intervention will result in total failure of the engine and/or propulsion equipment within a short time, for example in the case of overspeed.

7.4.3 Where the main propulsion and associated machinery including sources of main electrical supply are provided with various degrees of automatic or remote control and are under continuous manned supervision from a control room, this control room should be designed, equipped and installed so that the machinery operation will be as safe and effective as if it were under direct supervision; for this purpose sections 8.3 to 8.6 should apply as appropriate. Particular consideration should be given to protection against fire and flooding.

7.5 Steering

7.5.1 Except as provided in paragraph 7.5.18, units should be provided with a main steering gear and an auxiliary steering gear to the satisfaction of the Administration. The main steering gear and the auxiliary steering gear should be so arranged that a single failure in one of them so far as is reasonable and practicable will not render the other one inoperative.

7.5.2 The main steering gear should be of adequate strength and sufficient to steer the unit at maximum service speed and this should be demonstrated. The main steering gear and rudder stock should be so designed that they will not be damaged at maximum astern speed but this design requirement need not be proved by trials at maximum astern speed and maximum rudder angle.

7.5.3 The main steering gear should, with the unit at its deepest seagoing draught, be capable of putting the rudder over from 35° on one side to 35° on the other side with the unit running ahead at maximum service speed. The rudder should be capable of being put over from 35° on either side to 30° on the other side in not more than 28 s, under the same conditions.

7.5.4 The main steering gear should be operated by power where necessary to fulfil the provisions of paragraph 7.5.3 and in any case in which the Administration would require a rudder stock of over 120 mm diameter in way of the tiller.

7.5.5 The main steering gear power unit or units should be arranged to start automatically when power is restored after a power failure.

7.5.6 The auxiliary steering gear should be of adequate strength and sufficient to steer the unit at navigable speed and capable of being brought speedily into action in an emergency.

7.5.7 The auxiliary steering gear should be capable of putting the rudder over from 15° on one side to 15° on the other side in not more than 60 s with the unit at its deepest seagoing draught while running at one half of its maximum speed ahead or seven knots, whichever is the greater.

7.5.8 The auxiliary steering gear should be operated by power where necessary to fulfil the provisions of paragraph 7.5.7, and in any case in which the Administration would require a rudder stock of over 230 mm diameter in way of the tiller.

7.5.9 Where the main steering gear comprises two or more identical power units an auxiliary steering gear need not be fitted if the main steering gear is capable of operating the rudder in accordance with the provisions of paragraph 7.5.3 while operating with all power units. As far as is reasonable and practicable the main steering gear should be so arranged that a single failure in its piping or in one of the power units will not impair the integrity of the remaining part of the steering gear.

7.5.10 Control of the main steering gear should be provided both on the navigating bridge and in the steering gear compartment. If the steering gear control system which provides for control from the navigating bridge is electric, it should be supplied from the steering gear power circuit from a point within the steering gear compartment.

7.5.11 When the main steering gear is arranged according to paragraph 7.5.9 two independent control systems should be provided, each of which can be operated from the navigating bridge. Where the control system comprises a hydraulic telemeter, the Administration may waive the provisions for a second independent control system.

7.5.12 Where the auxiliary steering gear is power operated, it should be provided with a control system operated from the navigating bridge and this should be independent of the control system for the main steering gear.

7.5.13 Means should be provided in the steering gear compartment to disconnect the steering gear control system from the power circuit.

7.5.14 A means of communication should be provided between the navigating bridge and:

.1 the steering gear compartment; and

.2 the emergency steering position, if provided.

7.5.15 The exact angular position of the rudder, if power operated, should be indicated on the navigating bridge. The rudder angle indication should be independent of the steering gear control system.

7.5.16 The angular position of the rudder should be recognizable in the steering gear compartment.

7.5.17 An alternative power supply, sufficient at least to supply a steering gear power unit which complies with the provisions of paragraph 7.5.7 and also its associated control system and the rudder angle indicator, should be provided, automatically, within 45 s, either from the emergency source of electrical power or from another independent source of power located in the steering gear compartment. This independent source of power should be used only for this purpose and should have a capacity sufficient for 10 min of continuous operation.

7.5.18 Where a non-conventional rudder is installed, or where a unit is steered by means other than a rudder, the Administration should give special consideration to the steering system so as to ensure that an acceptable degree of reliability and effectiveness, which is based on paragraph 7.5.1, is provided.

7.6 Electric and electrohydraulic steering gear

7.6.1 Indicators for running indication of the motors of electric and electrohydraulic steering gear should be installed on the navigating bridge and at a suitable machinery control position.

7.6.2 Each electric or electrohydraulic steering gear comprising one or more power units should be served by at least two circuits fed from the main switchboard. One of the circuits may pass through the emergency switchboard. An auxiliary electric or electrohydraulic steering gear associated with a main electric or electrohydraulic steering gear may be connected to one of the

circuits supplying this main steering gear. The circuits supplying an electric or electrohydraulic steering gear should have adequate rating for supplying all motors which can be simultaneously connected to it and have to operate simultaneously.

7.6.3 Short-circuit protection and an overload alarm should be provided for these circuits and motors. Protection against excess current, if provided, should be for not less than twice the full load current of the motor or circuit so protected, and should be arranged to permit the passage of the appropriate starting currents. Where a three-phase supply is used, an alarm should be provided that will indicate failure of any one of the supply phases. The alarms required in the subparagraph should be both audible and visual and be situated in a position on the navigating bridge where they can be readily observed.

7.7 Communication between the navigating bridge and the engine-room

Units should be provided with at least two independent means for communicating orders from the navigating bridge to the position in the machinery space or control room from which the engines are normally controlled, one of which should provide visual indication of the orders and responses both in the engine-room and on the navigating bridge. Consideration should be given to providing a means of communication to any other positions from which the engines may be controlled.

7.8 Engineers' alarm

An engineers' alarm should be provided to be operated from the engine control room or at the manoeuvring platform, as appropriate, and clearly audible in the engineers' accommodation.

7.9 Main source of electrical power

7.9.1 In addition to complying with section 5.3, the main source of electrical power should comply with the following:

.1 The arrangement of the unit's main source of power should be such that the services referred to in paragraph 5.1.1.1 can be maintained regardless of the speed and direction of the main propelling engines or shafting.

.2 The generating plant should be such as to ensure that with any one generator or its primary source of power out of operation, the remaining generator or generators will be capable of providing the electrical services necessary to start the main propulsion plant from a dead ship condition. The emergency generator may be used for the purpose of starting from a dead ship condition if its capability either alone or combined with that of any generator is sufficient to provide at the same time those services required by paragraphs 5.4.6.1 to 5.4.6.4.

.3 For electrically self-propelled units the application of paragraph 5.3.2 need only include for propulsion sufficient power to ensure safe navigation when underway.

.4 Where electrical power is necessary to restore propulsion, the capacity should be sufficient to restore propulsion to the unit in conjunction with other machinery, as appropriate, from a dead ship condition within 30 min after blackout.

7.9.2 The main switchboard should be so placed relative to one main generating station that, as far as is practicable, the integrity of the normal supply may be affected only by a fire or other casualty in one space. An environmental enclosure for the main switchboard, such as may be provided by a machinery control room situated within the main boundaries of the space, is not to be considered as separating the switchboards from the generators.

7.9.3 In every unit where the total installed electrical power of the main generators is in excess of 3 MW, the main busbars should be subdivided into at least two parts which should normally be connected by removable links or other approved means; so far as is practicable, the connection of generators and any other duplicated equipment should be equally divided between the parts. Equivalent alternative arrangements should be permitted.

7.10 Emergency source of electrical power

In addition to complying with section 5.4, the emergency source of power should provide:

.1 For a period of 18 hours, emergency lighting at the steering gear;

.2 For a period of 18 hours:

.2.1 navigational aids as required by SOLAS chapter V;

.2.2 intermittent operation of the daylight signalling lamp and the unit's whistle;

unless they have an independent supply from an accumulator battery suitably located for use in an emergency and sufficient for the period of 18 hours;

.3 For the period of 30 min or a lesser period as permitted by SOLAS regulation II-1/29.14, the steering gear.

CHAPTER 8

PERIODICALLY UNATTENDED MACHINERY SPACES FOR ALL TYPES OF UNITS

8.1 General

The provisions of this chapter are additional to those of chapters 4 to 7 and 9 and apply to periodically unattended machinery spaces specified herein. The arrangements should ensure that the safety of the unit in the marine mode, including manoeuvring, and in machinery spaces of category A during drilling operations, where applicable, is equivalent to that of a unit having manned machinery spaces.

8.2 Application

8.2.1 The provisions of sections 8.3 to 8.9 apply to units which are designed to undertake self-propelled passages without external assistance.

8.2.2 Units other than those designed for unassisted passages, having periodically unattended spaces in which machinery associated with the marine mode is located, should comply with the applicable parts of sections 8.3, 8.4, 8.7, 8.8 and 8.9.

8.2.3 Where in any unit machinery spaces of category A for drilling purposes are intended to be periodically unattended the application of sections 8.3 and 8.9 to machinery spaces of category A should be considered by the Administration, due consideration being given to the characteristics of the machinery concerned and to the supervision envisaged to ensure safety.

8.2.4 Measures should be taken to the satisfaction of the Administration to ensure that the equipment of every unit is functioning in a reliable manner and that satisfactory arrangements are made for regular inspections and routine tests to ensure continuous reliable operation.

8.2.5 Every unit should be provided with documentary evidence, to the satisfaction of the Administration, of its fitness to operate with periodically unattended machinery spaces.

8.3 Fire protection

Fire prevention

8.3.1 Where necessary, oil fuel and lubricating oil pipes should be screened or otherwise suitably protected to avoid, as far as practicable, oil spray or oil leakages on to hot surfaces or into machinery air intakes. The number of joints in such piping systems should be kept to a minimum and, where practicable, leakages from high-pressure oil fuel pipes should be collected and arrangements provided for an alarm to be given.

8.3.2 Where daily service oil fuel tanks are filled automatically, or by remote control, means should be provided to prevent overflow spillages. Other equipment which treats flammable liquids automatically, e.g., oil fuel purifiers, which, whenever practicable, should be installed in a special space reserved for purifiers and their heaters, should have arrangements to prevent overflow spillages.

8.3.3 Where daily service oil fuel tanks or settling tanks are fitted with heating arrangements, a high-temperature alarm should be provided if the flashpoint of the oil fuel can be exceeded.

Fire detection

8.3.4 An approved fire detection system based on the self-monitoring principle and including facilities for periodical testing should be installed in periodically unattended machinery spaces.

8.3.5 The fire detection system should comply with the following.

.1 This fire detection system should be so designed and the detectors so positioned as to detect rapidly the onset of fire in any part of those spaces and under any normal conditions of operation of the machinery and variations of ventilation as required by the possible range of ambient temperatures. Except in spaces of restricted height and where their use is specially appropriate, detection systems using only thermal detectors should not be permitted. The detection system should initiate audible and visual alarms distinct in both respects from the alarms of any other system not indicating fire, in sufficient places to ensure that the alarms are heard and observed at the locations determined in accordance with paragraph 8.7.1.

.2 After installation the system should be tested under varying conditions of engine operation and ventilation.

.3 The fire detection system, where electrically supplied, should be fed automatically from an emergency source of power by a separate feeder if the main source of power fails.

8.3.6 Means should be provided in case of fire:

.1 in boiler air supply casings and exhausts (uptakes); and

.2 in scavenging air belts of propulsion machinery,

to detect fires and give alarms at an early stage, unless the Administration considers this to be unnecessary in a particular case.

8.3.7 Internal combustion engines of 2,250 kW and above or having cylinders of more than 300 mm bore should be provided with crankcase oil mist detectors or engine bearing temperature monitors or equivalent devices.

Fire fighting

8.3.8 An approved fixed fire-extinguishing system should be provided in units that are not required to have this provision by section 9.8.

8.3.9 Provision should be made for immediate water delivery from the fire main system at a suitable pressure, due regard being paid to the possibility of freezing, either:

.1 by remote starting arrangements for one of the main fire pumps. The starting positions should be provided at strategic locations including the navigating bridge, if any, and a normally manned control station; or

.2 by permanent pressurization of the fire main system, either

.2.1 by one of the main fire pumps; or

.2.2 by a dedicated pump for the purpose with automatic starting of one of the main fire pumps on reduction of the pressure.

8.3.10 The Administration should give special consideration to maintaining the fire integrity of the machinery spaces, to the location and centralization of the fire-extinguishing system controls and to the required shutdown arrangements (e.g., ventilation, fuel pumps, etc.); it may require additional fire-extinguishing appliances and other fire-fighting equipment and breathing apparatus.

8.4 Protection against flooding

Bilge-water level detection

8.4.1 High bilge-water level in periodically unattended machinery spaces below the assigned load line should activate an audible and visual alarm at the locations determined in accordance with paragraph 8.7.1.

8.4.2 Bilge wells should be provided, where practicable, in periodically unattended machinery spaces and should be large enough to accommodate easily the normal drainage during unattended periods. They should be located and monitored in such a way that the accumulation of liquids is detected at pre-set levels, at normal angles of inclination.

8.4.3 Where the bilge pumps are capable of being started automatically, means should be provided to indicate at the locations determined in accordance with paragraph 8.7.1 when the influx of liquid is greater than the pump capacity or when the pump is operating more frequently than would normally be expected. In these cases, smaller bilge wells to cover a reasonable period of time may be permitted. Where automatically controlled bilge pumps are provided, special attention should be given to oil pollution prevention requirements.

8.5 Bridge control of propulsion machinery

8.5.1 In the marine mode, including manoeuvring, the speed, direction of thrust and, if applicable, the pitch of the propeller should be fully controllable from the navigating bridge.

8.5.2 Such remote control should be performed by a single control device for each independent propeller, with automatic performance of all associated services, including, where necessary, means of preventing overload of the propulsion machinery. However, where more than one propeller is designed to operate simultaneously, these propellers may be controlled by a single control device.

8.5.3 The main propulsion machinery should be provided with an emergency stopping device on the navigating bridge which should be independent of the navigating bridge control system referred to in paragraph 8.5.2.

8.5.4 Propulsion machinery orders from the navigating bridge should be indicated in the main machinery control station or at the propulsion machinery control position, as appropriate.

8.5.5 Remote control of the propulsion machinery should be possible only from one location at a time; at such locations interconnected control positions are permitted. At each location there should be an indicator showing which location is in control of the propulsion machinery. The transfer of control between the navigating bridge and machinery spaces should be possible only in the main machinery space or in the main machinery control station. The system should include means to prevent the propelling thrust from altering significantly when transferring control from one location to another.

8.5.6 It should be possible for all machinery essential for propulsion and manoeuvring to be controlled from a local position, even in the case of failure in any part of the automatic or remote control systems.

8.5.7 The design of the remote automatic control system should be such that in case of its failure an alarm will be given on the navigating bridge and at the main machinery control station. Unless the Administration considers it impracticable, the pre-set speed and direction of thrust of the propeller should be maintained until local control is in operation.

8.5.8 Indicators should be fitted on the navigating bridge for:

.1 propeller speed and direction of rotation in the case of fixed-pitch propellers; or

.2 propeller speed and pitch position in the case of controllable-pitch propellers.

8.5.9 The number of consecutive automatic attempts which fail to produce a start should be limited to safeguard sufficient starting air pressure. An alarm should be provided to indicate low starting air pressure, set at a level which still permits starting operations of the propulsion machinery.

8.6 Communication

A reliable means of vocal communication should be provided between the main machinery control station or the propulsion machinery control position as appropriate, the navigating bridge, the engineer officers' accommodation and, on column-stabilized units, the central ballast control station.

8.7 Alarm system

8.7.1 An alarm system should be provided in the main machinery control station giving audible and visual indication of any fault requiring attention. It should also:

.1 activate an audible and visual alarm at another normally manned control station;

.2 activate the engineers' alarm provided in accordance with section 7.8, or an equivalent alarm acceptable to the Administration, if an alarm function has not received attention locally within a limited time;

.3 as far as is practicable be designed on the fail-to-safety principle; and

.4 when in the marine mode, activate an audible and visual alarm on the navigating bridge for any situation which requires action by the officer on watch or which should be brought to the attention of the officer on watch.

8.7.2 The alarm system should be continuously powered and should have an automatic change-over to a stand-by power supply in case of loss of normal power supply.

8.7.3 Failure of the normal power supply of the alarm system should be alarmed.

8.7.4 The alarm system should be able to indicate at the same time more than one fault and the acceptance of any alarm should not inhibit another alarm.

8.7.5 Acceptance at the position mentioned in paragraph 8.7.1 of any alarm condition should be indicated at the positions where it has been shown. Alarms should be maintained until they are accepted and the visual indications should remain until the fault has been corrected, when the alarm system should automatically reset to the normal operating condition.

8.8 Special provisions for machinery, boiler and electrical installations

8.8.1 The special provisions for the machinery, boiler and electrical installations should be to the satisfaction of the Administration and should include at least the requirements of this section.

Change-over function

8.8.2 Where stand-by machines are required for other auxiliary machinery essential to propulsion, automatic change-over devices should be provided. An alarm should be given on automatic change-over.

Automatic control and alarm systems

8.8.3 The control systems should be such that the services needed for the operation of the main propulsion machinery and its auxiliaries are ensured through the necessary automatic arrangements.

8.8.4 Means should be provided to keep the starting air pressure at the required level where internal combustion engines are used for main propulsion.

8.8.5 An alarm system complying with section 8.7 should be provided for all important pressures, temperatures and fluid levels and other essential parameters.

8.9 Safety systems

A safety system should be provided to ensure that serious malfunction in machinery or boiler operations, which presents an immediate danger, should initiate the automatic shutdown of that part of the plant and that an alarm should be given at the locations determined in accordance with paragraph 8.7.1. Shutdown of the propulsion system should not be automatically activated except in cases which could lead to serious damage, complete breakdown, or explosion. Where arrangements for overriding the shutdown of the main propelling machinery are fitted, these should be such as to preclude inadvertent operation. Visual means should be provided to indicate when the override has been activated.

CHAPTER 9

FIRE SAFETY

9.1 Alternative design and arrangements

When fire safety design or arrangements deviate from the prescriptive provisions of the Code, engineering analysis, evaluation and approval of the alternative design and arrangements should be carried out in accordance with SOLAS regulation II-2/17.

9.2 Structural fire protection

9.2.1 These provisions have been formulated principally for units having their hull superstructure, structural bulkheads, decks and deckhouses constructed of steel.

9.2.2 Units constructed of other materials may be accepted, provided that, in the opinion of the Administration, they provide an equivalent standard of safety.

9.2.3 Structural fire protection details, materials and methods of construction should be in accordance with the FTP Code, as applicable, and SOLAS regulations II-2/5.3 and II-2/6, as applied to cargo ships.

Fire integrity of bulkheads and decks

9.2.4 In addition to complying with the specific provisions for fire integrity of bulkheads and decks in this section and in section 9.3, the minimum fire integrity of bulkheads and decks should be as prescribed in tables 9-1 and 9-2. Exterior boundaries of superstructures and deckhouses enclosing accommodation, including any overhanging decks which support such accommodation, should be constructed to "A-60" standard for the whole of the portion which faces and is within 30 m of the centre of the rotary table. For units that have a movable substructure the 30 m should be measured with the substructure at its closest drilling position to the accommodation. The Administration may accept equivalent arrangements.

9.2.5 The following provisions should govern application of the tables:

.1 Tables 9-1 and 9-2 should apply respectively to the bulkheads and decks separating adjacent spaces.

.2 For determining the appropriate fire integrity standards to be applied to divisions between adjacent spaces, such spaces are classified according to their fire risk, as shown in categories (1) to (11) below. The title of each category is intended to be typical rather than restrictive. The number in parenthesis preceding each category refers to the applicable column or row in the tables:

(1) *Control stations* are spaces as defined in section 1.3.

(2) *Corridors* means corridors and lobbies.

(3) *Accommodation spaces* are spaces as defined in section 1.3, excluding corridors, lavatories and pantries containing no cooking appliances.

Table 9-1 – Fire integrity of bulkheads separating adjacent spaces

Spaces	(1)	(2)	(3)	(4)	(5)	(6)	(7)	(8)	(9)	(10)	(11)
Control stations (1)	A-0[d]	A-0	A-60	A-0	A-15	A-60	A-15	A-60[e]	A-60	*	A-0
Corridors (2)		C	B-0	B-0 A-0[b]	B-0	A-60	A-0	A-0[e]	A-0	*	B-0
Accommodation spaces (3)			C	B-0 A-0[b]	B-0	A-60	A-0	A-0[e]	A-0	*	C
Stairways (4)				B-0 A-0[b]	B-0 A-0[b]	A-60	A-0	A-0[e]	A-0	*	B-0 A-0[b]
Service spaces (low risk) (5)					C	A-60	A-0	A-0	A-0	*	B-0
Machinery spaces of category A (6)						*[a]	A-0[a]	A-60	A-60	*	A-0
Other machinery spaces (7)							A-0[a][c]	A-0	A-0	*	A-0
Hazardous areas (8)									A-0	–	A-0
Service spaces (high risk) (9)									A-0[c]	*	A-0
Open decks (10)										–	*
Sanitary and similar spaces (11)											C

See notes under table 9-2.

Table 9-2 – Fire integrity of decks separating adjacent spaces

Space below ↓ Space above →	(1)	(2)	(3)	(4)	(5)	(6)	(7)	(8)	(9)	(10)	(11)
Control stations (1)	A-0	A-0	A-0	A-0	A-0	A-60	A-0	A-0[e]	A-0	*	A-0
Corridors (2)	A-0	*	*	A-0	*	A-60	A-0	A-0[e]	A-0	*	*
Accommodation spaces (3)	A-60	A-0	*	A-0	*	A-60	A-0	A-0[e]	A-0	*	*
Stairways (4)	A-0	A-0	A-0	*	A-0	A-60	A-0	A-0[e]	A-0	*	A-0
Service spaces (low risk) (5)	A-15	A-0	A-0	A-0	*	A-60	A-0	A-0	A-0	*	A-0
Machinery spaces of category A (6)	A-60	A-60	A-60	A-60	A-60	*[a]	A-60	A-60	A-60	*	A-0
Other machinery spaces (7)	A-15	A-0	A-0	A-0	A-0	A-0[a]	*[a]	A-0	A-0	*	A-0
Hazardous areas (8)	A-60[e]	A-0[e]	A-0[e]	A-0[e]	A-0	A-60	A-0	–	A-0	*	A-0
Service spaces (high risk) (9)	A-60	A-0	A-0	A-0	A-0	A-60	A-0	A-0	A-0[c]	*	A-0
Open decks (10)	*	*	*	*	*	*	*	–	*	–	*
Sanitary and similar spaces (11)	A-0	A-0	*	A-0	*	A-0	A-0	A-0	A-0	*	*

Notes: to be applied to tables 9-1 and 9-2, as appropriate.

(a) Where the space contains an emergency power source or components of an emergency power source adjoining a space containing a ship's service generator or the components of a ship's service generator, the boundary bulkhead or deck between those spaces should be an "A-60" class division.

(b) For clarification as to which note applies see paragraphs 9.3.3 and 9.3.5.

(c) Where spaces are of the same numerical category and superscript "c" appears, a bulkhead or deck of the rating shown in the tables is only required when the adjacent spaces are for a different purpose, e.g., in category (9). A galley next to a galley does not require a bulkhead but a galley next to a paint room requires an "A-0" bulkhead.

(d) Bulkheads separating the navigating bridge, chartroom and radio room from each other may be "B-0" rating.

(e) An engineering evaluation should be conducted in accordance with paragraph 9.3.1. In no case should the bulkhead or deck rating be less than the value indicated in the tables.

Where an asterisk appears in the tables, the division should be of steel or equivalent material, but need not be of "A" class standard. However, where a deck is penetrated for the passage of electric cables, pipes and vent ducts, such penetrations should be made tight to prevent the passage of flame and smoke.

(4) *Stairways* are interior stairways, lifts and escalators (other than those wholly contained within the machinery spaces) and enclosures thereto. In this connection a stairway which is enclosed only at one level should be regarded as part of the space from which it is not separated by a fire door.

(5) *Service spaces (low risk)* are lockers, store-rooms and working spaces in which flammable materials are not stored, drying rooms and laundries.

(6) *Machinery spaces of category A* are spaces as defined in section 1.3.

(7) *Other machinery spaces* are spaces as defined in section 1.3 other than machinery spaces of category A.

(8) *Hazardous areas* are areas as defined in section 1.3.

(9) *Service spaces (high risk)* are lockers, store-rooms and working spaces in which flammable materials are stored, galleys, pantries containing cooking appliances, paint rooms and workshops other than those forming part of the machinery space.

(10) *Open decks* are open deck spaces, excluding hazardous areas.

(11) *Sanitary and similar spaces* are communal sanitary facilities such as showers, baths, lavatories, etc., and isolated pantries containing no cooking appliances. Sanitary facilities which serve a space and with access only from that space should be considered a portion of the space in which they are located.

9.2.6 Continuous "B" class ceilings or linings in association with the relevant decks or bulkheads may be accepted as contributing wholly or in part to the required insulation and integrity of a division.

9.2.7 In approving structural fire protection details, the Administration should consider the risk of heat transmission at intersections and terminal points of required thermal barriers. The insulation of a deck or bulkhead should be carried past the penetration, intersection or terminal point for a distance of at least 450 mm in the case of steel and aluminium structures. If a space is divided with a deck or a bulkhead of "A" class standard having insulation of different values, the insulation with the higher value should continue on the deck or bulkhead with the insulation of the lesser value for a distance of at least 450 mm.

9.2.8 Windows and sidescuttles, with the exception of navigating bridge windows, should be of the non-opening type. Navigating bridge windows may be of the opening type provided the design of such windows permits rapid closure. The Administration may permit windows and sidescuttles outside hazardous areas to be of the opening type.

9.2.9 The fire resistance of doors should, as far as practicable, be equivalent to that of the division in which they are fitted. External doors in superstructures and deckhouses should be constructed to at least "A-0" class standard and be self-closing, where practicable.

9.2.10 Self-closing doors in fire rated bulkheads should not be fitted with hold-back hooks. However, hold-back arrangements incorporating remote release fittings of the fail-safe type may be utilized.

9.3 Protection of accommodation spaces, service spaces and control stations

9.3.1 In general, accommodation spaces, service spaces and control stations should not be located adjacent to hazardous areas. However, where this is not practicable, an engineering evaluation should be performed to ensure that the level of fire protection and blast resistance of the bulkheads and decks separating these spaces from the hazardous areas are adequate for the likely hazard.

9.3.2 All bulkheads that are to be "A" class divisions should extend from deck to deck and to the deckhouse side or other boundaries.

9.3.3 All bulkheads forming "B" class divisions should extend from deck to deck and to the deckhouse side or other boundaries, unless continuous "B" class ceilings or linings are fitted on both sides of the bulkhead, in which case the bulkhead may terminate at the continuous ceiling or lining. In corridor bulkheads, ventilation openings may be permitted only in and under the doors of cabins, public spaces, offices and sanitary spaces. The openings should be provided only in the lower half of the door. Where such an opening is in or under a door, the total net area of any such opening or openings should not exceed 0.05 m^2. When such an opening is cut in a door it should be fitted with a grille made of non-combustible material. Such openings should not be provided in a door in a division forming a stairway enclosure.

9.3.4 Stairs should be constructed of steel or equivalent material.

9.3.5 Stairways which penetrate only a single deck should be protected at least at one level by "A" or "B" class divisions and self-closing doors so as to limit the rapid spread of fire from one deck to another. Personnel lift trunks should be protected by "A" class divisions. Stairways and lift trunks which penetrate more than a single deck should be surrounded by "A" class divisions and protected by self-closing doors at all levels.

9.3.6 Air spaces enclosed behind ceilings, panellings or linings should be divided by close fitting draught stops spaced not more than 14 m apart. In the vertical direction, such enclosed air spaces, including those behind linings of stairways, trunks, etc., should be closed at each deck.

9.3.7 Except for insulation in refrigerated compartments, insulation material, pipe and vent duct lagging, ceilings, linings and bulkheads should be of non-combustible material. Insulation of pipe fittings for cold service systems and vapour barriers and adhesives used in conjunction with insulation need not be non-combustible but they should be kept to a minimum and their exposed surfaces should have low-flame spread characteristics[28]. In spaces where penetration of oil products is possible, the surfaces of the insulation should be impervious to oil or oil vapours.

9.3.8 The framing, including grounds and the joint pieces of bulkheads, linings, ceilings and draught stops, should be of non-combustible material.

---

[28] Refer to Recommendation on improved fire test procedures for surface flammability of bulkhead, ceiling and deck finish materials, adopted by the Organization by resolution A.653(16), in conjunction with Guidelines on the evaluation of fire hazard properties of materials, adopted by the Organization by resolution A.166(ES.IV) and Annex 1, Part 1 of the International Code for Application of Fire Test Procedures (FTP Code).

9.3.9 All exposed surfaces in corridors and stairway enclosures and surfaces in concealed or inaccessible spaces in accommodation and service spaces and control stations should have low-flame spread characteristics. Exposed surfaces of ceilings in accommodation and service spaces and control stations should have low-flame spread characteristics.

9.3.10 Bulkheads, linings and ceilings may have combustible veneers provided that the thickness of such veneers should not exceed 2.5 mm within any space other than corridors, stairway enclosures and control stations where the thickness should not exceed 1.5 mm. Combustible materials used on these surfaces should have a calorific value[29] not exceeding 45 mJ/m^2 of the area for the thickness used.

9.3.11 Primary deck coverings, if applied within accommodation and service spaces and control stations, should be of approved material which will not readily ignite, this being determined in accordance with the FTP Code.

9.3.12 Paints, varnishes and other finishes used on exposed interior surfaces should not be capable of producing excessive quantities of smoke and toxic products, this being determined in accordance with the FTP Code.

9.3.13 Ventilation ducts should be of non-combustible material. Short ducts, however, not generally exceeding 2 m in length and with a cross-sectional area not exceeding 0.02 m^2 need not be non-combustible, subject to the following conditions:

.1 these ducts should be of a material which, in the opinion of the Administration, has a low fire risk;

.2 they may only be used at the end of the ventilation device;

.3 they should not be situated less than 600 mm, measured along the duct, from where it penetrates any "A" or "B" class division including continuous "B" class ceilings.

9.3.14 Where a thin plated duct with a free cross-sectional area equal to, or less than, 0.02 m^2 passes through "A" class bulkhead or decks, the opening should be lined with a steel sheet sleeve having a thickness of at least 3 mm and a length of at least 200 mm, divided preferably into 100 mm on each side of the bulkhead or, in the case of the deck, wholly laid on the lower side of the deck pierced. Where ventilation ducts with a cross-sectional area exceeding 0.02 m^2 pass through class "A" bulkheads or decks, the opening should be lined with a steel sheet sleeve unless the ducts passing through the bulkheads or decks are of steel in the vicinity of penetrations through the deck or bulkhead; the ducts and sleeves at such places should comply with the following:

.1 The ducts or sleeves should have a thickness of at least 3 mm and a length of at least 900 mm. When passing through bulkheads, this length should be divided preferably into 450 mm on each side of the bulkhead. These ducts, or sleeves lining such ducts, should be provided with fire insulation. The insulation should

[29] Refer to the recommendations published by the International Organization for Standardization, in particular publication ISO 1716:2002, Reaction to fire tests for building products – Determination of the heat of combustion.

have at least the same fire integrity as the bulkhead or deck through which the duct passes. Equivalent penetration protection may be provided to the satisfaction of the Administration.

.2 Ducts with a cross-sectional area exceeding 0.075 m^2, except those serving hazardous areas, should be fitted with fire dampers in addition to meeting the provisions of paragraph 9.3.14.1. The fire damper should operate automatically but should also be capable of being closed manually from both sides of the bulkhead or deck. The damper should be provided with an indicator which shows whether the damper is open or closed. Fire dampers are not required, however, where ducts pass through spaces surrounded by "A" class divisions, without serving those spaces, provided those ducts have the same fire integrity as the divisions which they pierce. The Administration may, given special considerations, permit operation from one side of a division only.

9.3.15 In general, ventilation systems for machinery spaces of category A, galleys and hazardous areas should be separated from each other and from the ventilation systems serving other spaces. Ducts serving hazardous areas should not pass through accommodation spaces, service spaces, or control spaces. Ducts provided for the ventilation of machinery spaces of category A and galleys should not pass through accommodation spaces, control stations or service spaces unless:

.1 the ducts are constructed of steel having a thickness of at least 3 mm and 5 mm for ducts the widths or diameters of which are up to and including 300 mm and 760 mm and over respectively and, in the case of such ducts, the widths or diameters of which are between 300 mm and 760 mm, having a thickness obtained by interpolation;

.2 the ducts are suitably supported and stiffened;

.3 the ducts are fitted with automatic fire dampers close to the boundaries penetrated; and

.4 the ducts are insulated to "A-60" class standard from the machinery spaces or galleys to a point at least 5 m beyond each fire damper;

or

.5 the ducts are constructed of steel in accordance with paragraphs 9.3.15.1.1 and 9.3.15.1.2; and

.6 the ducts are insulated to "A-60" class standard throughout the accommodation spaces, service spaces or control stations.

9.3.16 Ducts provided for the ventilation of accommodation spaces, service spaces or control stations should not pass through machinery spaces of category A, galleys or hazardous areas. However, the Administration may permit a relaxation from these provisions, except for the ducts passing through hazardous areas, provided that:

.1 the ducts where they pass through a machinery space of category A or a galley are constructed of steel in accordance with paragraphs 9.3.15.1.1 and 9.3.15.1.2;

.2 automatic fire dampers are fitted close to the boundaries penetrated; and

.3 the integrity of the machinery space or galley boundaries is maintained at the penetrations;

or

.4 the ducts where they pass through a machinery space of category A or a galley are constructed of steel in accordance with paragraphs 9.3.15.1.1 and 9.3.15.1.2; and

.5 are insulated to "A-60" standard within the machinery space or galley.

9.3.17 Ventilation ducts with a cross-sectional area exceeding 0.02 m^2 passing through "B" class bulkheads should be lined with steel sheet sleeves of 900 mm in length divided preferably into 450 mm on each side of the bulkhead unless the duct is of steel for this length.

9.3.18 Where they pass through accommodation spaces or spaces containing combustible materials, the exhaust ducts from galley ranges should be of equivalent fire integrity to "A" class divisions.

9.3.19 Each galley exhaust duct should be fitted with:

.1 a grease trap readily removable for cleaning;

.2 a fire damper located in the galley end of the duct which is automatically and remotely operated and, in addition a remotely operated fire damper located in the exhaust end of the duct;

.3 arrangements, operable from within the galley, for shutting off the exhaust fans; and

.4 fixed means for extinguishing a fire within the duct.

9.3.20 The main inlets and outlets of all ventilation systems should be capable of being closed from outside the spaces being ventilated.

9.3.21 Power ventilation of accommodation spaces, service spaces, control stations, machinery spaces and hazardous areas should be capable of being stopped from an easily accessible position outside the space being served. The accessibility of this position in the event of a fire in the spaces served should be specially considered. The means provided for stopping the power ventilation serving machinery spaces or hazardous areas should be entirely separate from the means provided for stopping ventilation of other spaces.

9.3.22 Windows and sidescuttles in boundaries which are required to meet an "A-60" standard which face the drill floor area should be:

.1 constructed to an "A-60" standard; or

.2 protected by a water curtain; or

.3 fitted with shutters of steel or equivalent material.

9.3.23 The ventilation of the accommodation spaces and control stations should be arranged in such a way as to prevent the ingress of flammable, toxic or noxious gases or smoke from surrounding areas.

9.4 Means of escape

9.4.1 Within the accommodation spaces, service spaces and control stations the following provisions should be applied:

.1 In every general area which is likely to be regularly manned or in which personnel are accommodated at least two separate escape routes should be provided, situated as far apart as practicable, to allow ready means of escape to the open decks and embarkation stations. Exceptionally, the Administration may permit only one means of escape, due regard being paid to the nature and location of spaces and to the number of persons who might normally be accommodated or employed there.

.2 Stairways should normally be used for means of vertical escape; however, a vertical ladder may be used for one of the means of escape when the installation of a stairway is shown to be impracticable.

.3 Every escape route should be readily accessible and unobstructed and all exit doors along the route should be readily operable. Dead-end corridors exceeding 7 m in length should not be permitted.

.4 In addition to the emergency lighting, the means of escape in accommodation areas, including stairways and exits, should be marked by lighting or photoluminescent strip indicators placed not more than 300 mm above the deck at all points of the escape route, including angles and intersections. The marking should enable personnel to identify the routes of escape and readily identify the escape exits. If electric illumination is used, it should be supplied by the emergency source of power and it should be so arranged that the failure of any single light or cut in a lighting strip will not result in the marking being ineffective. Additionally, escape route signs and fire equipment location markings should be of photoluminescent material or marked by lighting. The Administration should ensure that such lighting or photoluminescent equipment has been evaluated, tested and applied in accordance with the FSS Code.

9.4.2 Two means of escape should be provided from each machinery space of category A. Ladders should be of steel or other equivalent material. In particular, one of the following provisions should be complied with:

.1 two sets of ladders, as widely separated as possible, leading to doors in the upper part of the space, similarly separated and from which access is provided to the open deck. One of these ladders should be located within a protected enclosure that satisfies tables 9-1 and 9-2, category (4), from the lower part of the space it serves to a safe position outside the space. Self-closing fire doors of the same fire integrity standards should be fitted in the enclosure. The ladder should be fixed in such a way that heat is not transferred into the enclosure through non-insulated fixing points. The enclosure should have minimum internal dimensions of at least 800 mm by 800 mm, and should have emergency lighting provisions; or

.2 one ladder leading to a door in the upper part of the space from which access is provided to the open deck. Additionally, in the lower part of the space, in a position well separated from the ladder referred to, a steel door capable of being operated from each side should be provided with access to a safe escape route from the lower part of the space to the open deck.

9.4.3 From machinery spaces other than those of category A, escape routes should be provided to the satisfaction of the Administration having regard to the nature and location of the space and whether persons are normally employed there.

9.4.4 Lifts should not be considered as forming one of the required means of escape.

9.4.5 Consideration should be given by the Administration to the siting of superstructures and deckhouses such that in the event of fire at the drill floor at least one escape route to the embarkation position and survival craft is protected against radiation effects of that fire as far as practicable.

9.4.6 Stairways and corridors used as a means of escape should meet the provisions of paragraph 13.3 of the FSS Code.

9.5 Fire safety systems

Fire safety systems should be in accordance with the FSS Code, as applicable.

9.6 Emergency escape breathing devices

9.6.1 Emergency escape breathing devices (EEBDs) should comply with the FSS Code. Spare emergency escape breathing devices should be kept on board to the satisfaction of the Administration.

9.6.2 Emergency escape breathing devices should be provided as follows:

.1 In machinery spaces of category A containing internal combustion machinery used for main propulsion, EEBDs should be positioned as follows:

.1.1 one (1) EEBD in the engine control room, if located within the machinery space;

.1.2 one (1) EEBD in workshop areas. If there is, however, a direct access to an escape way from the workshop, an EEBD is not required; and

.1.3 one (1) EEBD on each deck or platform level near the escape ladder constituting the second means of escape from the machinery space (the other means being an enclosed escape trunk or watertight door at the lower level of the space).

.1.4 Alternatively, a different number or location may be determined by the Administration taking into consideration the layout and dimensions or the normal manning of the space.

.2 For machinery spaces of category A other than those containing internal combustion machinery used for main propulsion, one (1) EEBD should, as a minimum, be provided on each deck or platform level near the escape ladder constituting the second means of escape from the space (the other means being an enclosed escape trunk or watertight door at the lower level of the space).

.3 For other machinery spaces, the number and location of EEBDs are to be determined by the Administration.

9.7 Fire pumps, fire mains, hydrants and hoses

9.7.1 At least two independently driven power pumps should be provided, each arranged to draw directly from the sea and discharge into a fixed fire main. However, in units with high suction lifts, booster pumps and storage tanks may be installed, provided such arrangements will satisfy all the provisions of paragraphs 9.7.1 to 9.7.9.

9.7.2 At least one of the required pumps should be dedicated for fire-fighting duties and be available for such duties at all times.

9.7.3 The arrangements of the pumps, sea suctions and sources of power should be such as to ensure that a fire in any one space would not put both the required pumps out of action.

9.7.4 The capacity of the required pumps should be appropriate to the fire-fighting services supplied from the fire main. Where more pumps than required are installed, their capacity should be to the satisfaction of the Administration.

9.7.5 Each pump should be capable of delivering at least one jet simultaneously from each of any two fire hydrants, hoses and 19 mm nozzles while maintaining a minimum pressure of 0.35 N/mm^2 at any hydrant. In addition, where a foam system is provided for protection of the helicopter deck, the pump should be capable of maintaining a pressure of 0.7 N/mm^2 at the foam installation. If the water consumption for any other fire protection or fire-fighting purpose should exceed the rate of the helicopter deck foam installation, this consumption should be the determining factor in calculating the required capacity of the fire pumps.

9.7.6 Where either of the required pumps is located in a space not normally manned and, in the opinion of the Administration, is relatively far removed from working areas, suitable provision should be made for remote start-up of that pump and remote operation of associated suction and discharge valves.

9.7.7 Except as provided in paragraph 9.7.2, sanitary, ballast, bilge or general service pumps may be accepted as fire pumps, provided that they are not normally used for pumping oil.

9.7.8 Every centrifugal pump which is connected to the fire main should be fitted with a non-return valve.

9.7.9 Relief valves should be provided in conjunction with all pumps connected to the fire main if the pumps are capable of developing a pressure exceeding the design pressure of the fire main, hydrants and hoses. Such valves should be so placed and adjusted as to prevent excessive pressure in the fire main system.

9.7.10 A fixed fire main should be provided and be so equipped and arranged as to meet the provisions of paragraphs 9.7.10 to 9.7.20.

9.7.11 The diameter of the fire main and water service pipes should be sufficient for the effective distribution of the maximum required discharge from the required fire pumps operating simultaneously.

9.7.12 With the required fire pumps operating simultaneously, the pressure maintained in the fire mains should be to the satisfaction of the Administration and be adequate for the safe and efficient operation of all equipment supplied therefrom.

9.7.13 The fire main should, where practicable, be routed clear of hazardous areas and be arranged in such a manner as to make maximum use of any thermal shielding or physical protection afforded by the structure of the unit.

9.7.14 The fire main should be provided with isolating valves located so as to permit optimum utilization in the event of physical damage to any part of the main.

9.7.15 The fire main should not have connections other than those necessary for fire-fighting purposes.

9.7.16 All practical precautions consistent with having water readily available should be taken to protect the fire main against freezing.

9.7.17 Materials readily rendered ineffective by heat should not be used for fire mains and hydrants unless adequately protected. The pipes and hydrants should be so placed that the fire hoses may be easily coupled to them.

9.7.18 A cock or valve should be fitted to serve each fire hose so that any fire hose may be removed while the fire pumps are operating.

9.7.19 The number and position of the hydrants should be such that at least two jets of water, not emanating from the same hydrant, one of which should be from a single length of fire hose, may reach any part of the unit normally accessible to those on board while the unit is being navigated or is engaged in drilling operations**.** A hose should be provided for every hydrant.

9.7.20 Fire hoses should be of material approved by the Administration and be sufficient in length to project a jet of water to any of the spaces in which they may be required to be used. Their maximum length should be to the satisfaction of the Administration. Every fire hose should be provided with a dual-purpose nozzle and the necessary couplings. Fire hoses, together with any necessary fittings and tools, should be ready for use at any time and should be kept in conspicuous positions near the water service hydrants or connections.

9.7.21 Fire hoses should have a length of at least 10 m, but not more than:

.1 15 m in machinery spaces;

.2 20 m in other spaces and open decks; and

.3 25 m for open decks with a maximum breadth in excess of 30 m.

9.7.22 Nozzles should comply with the following:

.1 Standard nozzle sizes should be 12 mm, 16 mm and 19 mm or as near thereto as possible. Larger diameter nozzles may be permitted at the discretion of the Administration.

.2 For accommodation and service spaces, a nozzle size greater than 12 mm need not be used.

.3 For machinery spaces and exterior locations, the nozzle size should be such as to obtain the maximum discharge possible from two jets at the pressure specified in paragraph 9.7.5 from the smallest pump, provided that a nozzle size greater than 19 mm need not be used.

9.7.23 The surface unit should be provided with at least one international shore connection complying with SOLAS regulation II-2/10-2.1.7 and the FSS Code. Facilities should be available enabling such a connection to be used on any side of the unit.

9.8 Fire-extinguishing arrangement in machinery spaces and in spaces containing fired processes

9.8.1 In spaces where main or auxiliary oil-fired boilers and other fired processes of equivalent thermal rating are situated, or in spaces containing oil fuel units or settling tanks, the unit should be provided with the following:

.1 One of the following fixed fire-extinguishing systems complying with SOLAS regulation II-2/10.4:

.1.1 a fixed pressure water-spraying system;

.1.2 a fixed gas fire-extinguishing system;

.1.3 a fixed high-expansion foam installation.

Where the machinery space and spaces containing fired processes are not entirely separate, or if fuel oil can drain from the latter spaces into the machinery space, the combined machinery space and fired process space should be considered as one compartment.

.2 At least two approved portable foam extinguishers or equivalent in each space containing a fired process and each space in which a part of the oil fuel installation is situated. In addition, at least one extinguisher of the same description with a capacity of 9 *l* for each burner, whereby the total capacity of the additional extinguisher or extinguishers need not exceed 45 *l* for any one space.

.3 A receptacle containing sand, sawdust impregnated with soda, or other approved dry material in such quantity as may be required by the Administration. An approved portable extinguisher may be provided as an alternative.

9.8.2 Spaces containing internal combustion machinery used either for main propulsion or for other purposes, when such machinery has a total power output of not less than 750 kW, should be provided with the following arrangements:

.1 one of the fixed arrangements required by paragraph 9.8.1.1; and

.2 one approved foam-type extinguisher of not less than 45 *l* capacity or equivalent in every engine space and one approved portable foam extinguisher for each 750 kW of engine power output or part thereof. The total number of portable extinguishers so supplied should be not less than two and need not exceed six.

9.8.3 The Administration should give special consideration to the fire-extinguishing arrangements to be provided in spaces not fitted with fixed fire-extinguishing installations containing steam turbines which are separated from boiler rooms by watertight bulkheads.

9.8.4 Where, in the opinion of the Administration, a fire hazard exists in any machinery space for which no specific provisions for fire-extinguishing appliances are prescribed in paragraphs 9.8.1 to 9.8.3, there should be provided in, or adjacent to, that space a number of approved portable fire extinguishers or other means of fire extinction to the satisfaction of the Administration.

9.9 Portable fire extinguishers in accommodation, service and working spaces

9.9.1 Except for the supplemental arrangements provided in paragraph 9.9.2, portable fire extinguishers in accommodation spaces, service spaces, control stations, machinery spaces of category A, other machinery spaces, cargo spaces, weather deck and other spaces should be provided in number and arrangement in accordance with the guidance provided by the Organization[30] to the satisfaction of the Administration.

9.9.2 Table 9-3 contains supplemental recommendations for number and distribution of additional portable fire extinguishers on mobile offshore drilling units. Where the recommendations in table 9-3 differ from the guidance provided by the Organization[30], the provisions of table 9-3 should be followed. In all cases, the selection of the fire extinguishing medium should be based on the fire hazard for the space protected.[31] The classes of portable fire extinguishers in the table are only for reference.

---

[30] Refer to the Unified Interpretation of SOLAS chapter II-2 on the Number and Arrangement of Portable Fire Extinguishers on Board Ships, adopted by the Organization by MSC.1/Circ.1275.

[31] Refer to the Improved Guidelines for Marine Portable Fire Extinguishers, adopted by the Organization by resolution A.951(23).

Table 9-3 – Recommended number and distribution of additional portable extinguishers

Type of Space	Minimum number of extinguishers[1]	Class(es) of extinguisher(s)
Space containing the controls for the main source of electrical power	1; and 1 additional extinguisher suitable for electrical fires when main switchboards are arranged in the space	A and/or C
Cranes: With electric motors/hydraulics	0	
Cranes: With internal combustion engine	2 (1 in cab and 1 at exterior of engine compartment)	B
Drill floor	2 (1 at each exit)	C
Helidecks	In accordance with section 9.16	B
Machinery spaces of category A	In accordance with section 9.8	B
Machinery spaces of category A which are periodically unattended	At each entrance in accordance with section 9.8[2]	B
Main switchboards	2 in the vicinity	C
Mud pits, Mud processing areas	1 for each enclosed space (Travel distance to an extinguisher not to exceed 10 m for open space)	B

[1] Minimum size should be in accordance with paragraph 3.1.1 of chapter 4 of the FSS Code.

[2] A portable extinguisher provided for that space may be located outside near the entrance to that space. A portable fire extinguisher placed outside near the entrance to that space may also be considered as satisfying the provisions for the space in which it is located.

9.10 Fire detection and alarm system

9.10.1 An automatic fire detection and alarm system should be provided in all accommodation and service spaces. Accommodation spaces should be fitted with smoke detectors.

9.10.2 Sufficient manual fire alarm stations should be installed at suitable locations throughout the unit.

9.10.3 A fixed fire detection and fire alarm system should be installed in:

.1 periodically unattended machinery spaces; and

.2 machinery spaces where:

2.1 the installation of automatic and remote control system and equipments has been approved in lieu of continuous manning of the spaces, and

2.2 the main propulsion and associated machinery, including the main sources of electrical power, are provided with various degrees of automatic or remote control and are under continuous manned supervision from a control room.

9.11 Flammable gas detection and alarm system

9.11.1 A fixed automatic gas detection and alarm system should be provided to the satisfaction of the Administration so arranged as to monitor continuously all enclosed areas of the unit in which an accumulation of flammable gas may be expected to occur and capable of indicating at the main control point by aural and visual means the presence and location of an accumulation.

9.11.2 At least two portable gas monitoring devices should be provided, each capable of accurately measuring a concentration of flammable gas.

9.12 Hydrogen sulphide detection and alarm system

9.12.1 A fixed automatic hydrogen sulphide gas detection and alarm system should be provided to the satisfaction of the Administration so arranged as to monitor continuously the drilling area, mud processing area and well fluid test area of the unit and capable of giving audible and visual alarm at the main control points. If the alarm at the main control point is unanswered within 2 min, the toxic gas (hydrogen sulphide) alarm and the helideck status light under paragraph 13.5.25 should be automatically activated.

9.12.2 At least two portable hydrogen sulphide gas monitoring devices should be provided on the unit.

9.13 Fire-fighters' outfits

9.13.1 At least two fire-fighters' outfits complying with the relevant requirements of the FSS Code should be provided, each with portable instruments for measuring oxygen and flammable vapour concentrations acceptable to the Administration.

9.13.2 Two spare charges should be provided for each required breathing apparatus. Units that are equipped with suitably located means for fully recharging the air cylinders free from contamination need carry only one spare charge for each required apparatus.

9.13.3 The fire-fighters' outfits should be kept ready for use in an easily accessible location that is permanently and clearly marked. They should be stored in two or more widely separated locations.

9.14 Recharging of air cylinders

9.14.1 The apparatus for recharging air cylinders, if provided, should have its power supplied from the emergency supply or be independently diesel-powered, or be so constructed or equipped that the air cylinders may be used immediately after recharging.

9.14.2 The apparatus should be suitably located in a sheltered space above main deck level on the unit.

9.14.3 Intakes for air compressors should draw from a source of clean air.

9.14.4 The air should be filtered after compression to eliminate compressor oil contamination.

9.14.5 The recharging capacity should meet the requirements of SOLAS regulation II-2/10.10.2.6.

9.14.6 The equipment and its installation should be to the satisfaction of the Administration.

9.15 Arrangements in machinery and working spaces

9.15.1 Means should be provided for stopping ventilating fans serving machinery and working spaces and for closing all doorways, ventilators, annular spaces around funnels and other openings to such spaces. These means should be capable of being operated from outside such spaces in case of fire.

9.15.2 Machinery driving forced and induced draught fans, electric motor pressurization fans, oil fuel transfer pumps, oil fuel unit pumps and other similar fuel pumps should be fitted with remote controls situated outside the space concerned so that they may be stopped in the event of a fire arising in the space in which they are located.

9.15.3 Every oil fuel suction pipe from a storage, settling or daily service tank situated above the double bottom should be fitted with a cock or valve capable of being closed from outside the space concerned in the event of a fire arising in the space in which such tanks are situated. In the special case of deep tanks situated in any shaft or pipe tunnel, valves on the tanks should be fitted but control in the event of fire may be effected by means of an additional valve on the pipeline or lines outside the tunnel or tunnels.

9.16 Provisions for helicopter facilities

9.16.1 This section provides additional measures in order to address the fire safety objectives for units fitted with facilities for helicopters and meets the following functional provisions:

.1 helideck structure should be adequate to protect the unit from the fire hazards associated with helicopter operations;

.2 fire-fighting appliances should be provided to adequately protect the unit from the fire hazards associated with helicopter operations;

.3 refuelling facilities and operations should provide the necessary measures to protect the unit from the fire hazards associated with helicopter operations; and

.4 helicopter facility operation manuals, which may be included in the operation manual under chapter 14 of this Code, and training should be provided.

9.16.2 The construction of the helidecks should be of steel or other equivalent materials. If the helideck forms the deckhead of a deckhouse or superstructure, it should be insulated to "A-60" class standard. If the Administration permits aluminium or other low melting point metal construction that is not made equivalent to steel, the following provisions should be satisfied:

.1 if the helideck is cantilevered over the side of the unit, after each fire that may have an effect on the structural integrity of the helideck or its supporting structures, the helideck should undergo a structural analysis to determine its suitability for further use; and

.2 if the helideck is located above the unit's deckhouse or similar structure, the following conditions should be satisfied:

.2.1 the deckhouse top and bulkheads under the helideck should have no openings;

.2.2 windows under the helideck should be provided with steel shutters; and

.2.3 after each fire on the helideck or supporting structure the helideck should undergo a structural analysis to determine its suitability for further use.

9.16.3 A helideck should be provided with both a main and an emergency means of escape and access for fire fighting and rescue personnel. These should be located as far apart from each other as is practicable and preferably on opposite sides of the helideck.

9.16.4 In close proximity to the helideck, the following fire-fighting appliances should be provided and stored near the means of access to that helideck:

.1 at least two dry powder extinguishers having a total capacity of not less than 45 kg but not less than 9 kg each;

.2 carbon dioxide extinguishers of a total capacity of not less than 18 kg or equivalent;

.3 a foam application system consisting of monitors or foam-making branch pipes capable of delivering foam to all parts of the helideck in all weather conditions in which the helideck is intended to be available for helicopter operations. The minimum capacity of the foam production system will depend upon the size of the area to be protected, the foam application rate, the discharge rates of installed equipment and the expected duration of application:

.3.1 a minimum application rate of 6 l/m^2 within a circle having a diameter equal to the *D*-value;

.3.2 a minimum of 5 min discharge capability should be provided;

.3.3 foam delivery at the minimum application rate should start within 30 s of system activation;

.4 the principal agent should be suitable for use with salt water and conform to performance standards not inferior to those acceptable to the Organization;[32]

.5 at least two nozzles of an approved dual-purpose type (jet/spray) and hoses sufficient to reach any part of the helideck;

.6 in addition to the provisions of section 9.13, two fire-fighter's outfits; and

.7 at least the following equipment should be stored in a manner that provides for immediate use and protection from the elements:

[32] Refer to the International Civil Aviation Organization Airport Services Manual, part 1, Rescue and Fire Fighting, chapter 8, Extinguishing Agent Characteristics, paragraph 8.1.5, Foam Specifications table 8-1, level 'B'.

.7.1 adjustable wrench;

.7.2 blanket, fire-resistant;

.7.3 cutters, bolt, 600 mm;

.7.4 hook, grab or salving;

.7.5 hacksaw, heavy duty complete with six spare blades;

.7.6 ladder;

.7.7 lift line 5 mm diameter and 30 m in length;

.7.8 pliers, side-cutting;

.7.9 set of assorted screwdrivers;

.7.10 harness knife complete with sheath; and

.7.11 crowbar.

9.16.5 Drainage facilities in way of helidecks should be:

.1 constructed of steel or other arrangements providing equivalent fire safety;

.2 lead directly overboard independent of any other system; and

.3 designed so that drainage does not fall onto any part of the unit.

9.16.6 Where the unit has helicopter refuelling, the following provisions should be complied with:

.1 a designated area should be provided for the storage of fuel tanks which should be:

.1.1 as remote as is practicable from accommodation spaces, escape routes and embarkation stations; and

.1.2 isolated from areas containing a source of vapour ignition;

.2 the fuel storage area should be provided with arrangements whereby fuel spillage may be collected and drained to a safe location;

.3 tanks and associated equipment should be protected against physical damage and from a fire in an adjacent space or area;

.4 where portable fuel storage tanks are used, special attention should be given to:

.4.1 design of the tank for its intended purpose;

.4.2 mounting and securing arrangements;

.4.3 electric bonding; and

.4.4 inspection procedures;

.5 storage tank fuel pumps should be provided with means which permit shutdown from a safe remote location in the event of a fire. Where a gravity-fuelling system is installed, equivalent closing arrangements should be provided to isolate the fuel source;

.6 the fuel pumping unit should be connected to one tank at a time. The piping between the tank and the pumping unit should be of steel or equivalent material, as short as possible, and protected against damage;

.7 electrical fuel pumping units and associated control equipment should be of a type suitable for the location and potential hazards;

.8 fuel pumping units should incorporate a device which will prevent over-pressurization of the delivery or filling hose;

.9 equipment used in refuelling operations should be electrically bonded; and

.10 "NO SMOKING" signs should be displayed at appropriate locations.

9.17 Storage of gas cylinders

9.17.1 Where more than one cylinder of oxygen and more than one cylinder of acetylene are carried simultaneously, such cylinders should be arranged in accordance with the following:

.1 Permanent piping systems for oxyacetylene systems are acceptable provided that they are designed having due regard to standards and codes of practice to the satisfaction of the Administration.

.2 Where two or more cylinders of each gas are intended to be carried in enclosed spaces, separate dedicated storage rooms should be provided for each gas.

.3 Storage rooms should be constructed of steel, and be well ventilated and accessible from the open deck.

.4 Provision should be made for the expeditious removal of cylinders in the event of fire.

.5 "NO SMOKING" signs should be displayed at the gas cylinder storage rooms.

.6 Where cylinders are stowed in open locations means should be provided to:

.6.1 protect cylinders and associated piping from physical damage;

.6.2 minimize exposure to hydrocarbons; and

.6.3 ensure suitable drainage.

9.17.2 Fire-extinguishing arrangements for the protection of areas or spaces where such cylinders are stored should be to the satisfaction of the Administration.

9.18 Fire control plan

A fire control plan complying with SOLAS regulation II-2/15.2.4 should be permanently exhibited.

9.19 Operational readiness and maintenance

9.19.1 The following functional provisions should be met:

.1 gas detection systems, fire protection systems and fire-fighting systems and appliances should be maintained ready for use; and

.2 gas detection systems, fire protection systems and fire-fighting systems and appliances should be properly tested and inspected.

9.19.2 At all times while the unit is in service, the provisions of paragraph 9.19.1 should be complied with. A unit is not in service when:

.1 it is in for repairs or lay up (either at anchor or in port) or in dry-dock;

.2 it is declared not in service by the owner or the owner's representative.

9.19.3 Operational readiness

.1 The following gas detection and fire protection systems should be kept in good order so as to ensure their intended performance if a fire occurs:

.1.1 structural fire protection including fire-resisting divisions and protection of openings and penetrations in these divisions;

.1.2 fire detection and fire alarm systems;

.1.3 gas detection and alarm systems; and

.1.4 means of escape systems and appliances.

.2 Fire-fighting systems and appliances and portable gas detection systems should be kept in good working order and readily available for immediate use. Portable extinguishers which have been discharged should be immediately recharged or replaced with an equivalent unit.

9.19.4 Maintenance, testing and inspections

.1 Maintenance, testing and inspections should be carried out based on the guidelines developed by the Organization[33] and in a manner having due regard to ensuring the reliability of fire-fighting systems and appliances.

[33] Refer to the Guidelines on maintenance and inspection of fire protection systems and appliances (MSC/Circ.850).

.2 The maintenance plan should be kept on board the unit and be available for inspection whenever required by the Administration.

.3 The maintenance plan should include at least the following fire protection systems and fire-fighting systems and appliances, where installed:

.3.1 fire mains, fire pumps and hydrants including hoses, nozzles and international shore connections;

.3.2 fixed fire detection and fire alarm systems;

.3.3 fixed fire-extinguishing systems and other fire-extinguishing appliances;

.3.4 automatic sprinkler, fire detection and fire alarm systems;

.3.5 ventilation systems including fire and smoke dampers, fans and their controls;

.3.6 emergency shut down of fuel supply;

.3.7 fire doors including their controls;

.3.8 general emergency alarm systems;

.3.9 emergency escape breathing devices;

.3.10 portable fire extinguishers including space charges or spare extinguishers;

.3.11 portable hydrogen sulphide gas detection monitoring devices;

.3.12 portable flammable gas and oxygen monitoring devices;

.3.13 gas detection and alarm systems; and

.3.14 fire-fighter's outfits.

.4 The maintenance programme may be computer-based.

CHAPTER 10

LIFE-SAVING APPLIANCES AND EQUIPMENT

10.1 General

Definitions

10.1.1 For the purpose of this chapter, unless expressly provided otherwise, the terms used, relating to life-saving appliances, are as defined in SOLAS regulation III/3.

Evaluation, testing and approval of life-saving appliances

10.1.2 Life-saving appliances should be evaluated, tested and approved, as provided in SOLAS regulations III/4 and III/5.

New and novel life-saving appliances

10.1.3 New and novel life-saving appliances should meet the applicable provisions of SOLAS chapter III, including those for servicing and maintenance.

Life-saving appliances

10.1.4 All life-saving appliances should comply with the applicable SOLAS regulations.

10.1.5 All lifeboats should be fire-protected in accordance with the LSA Code.

10.2 Alternative design and arrangements

When alternative design or arrangements deviate from the prescriptive provisions of the Code, an engineering analysis, evaluation and approval of the design and arrangements should be carried out in accordance with SOLAS regulation III/38 based on the Guidelines developed by the Organization.[34]

10.3 Survival craft

Surface units

10.3.1 Each unit should carry, on each side of the unit, one or more lifeboats complying with the requirements of the LSA Code of such aggregate capacity as will accommodate the total number of persons on board. Alternatively, the Administration may accept one or more free-fall lifeboats, complying with the requirements of section 4.7 of the LSA Code, capable of being free-fall launched over the end of the unit of such aggregate capacity as will accommodate the total number of persons on board.

10.3.2 In addition, each unit should carry a liferaft or liferafts, complying with the requirements of the LSA Code and approved to the actual operating height, capable of being launched on either side of the unit and of such aggregate capacity as will accommodate the total number of

[34] Refer to the Guidelines on alternative design and arrangements for SOLAS chapters II-1 and III (MSC.1/Circ.1212).

persons on board. If the liferaft or liferafts cannot be readily transferred for launching on either side of the unit, the total capacity available on each side should be sufficient to accommodate the total number of persons on board.

10.3.3 Where the survival craft are stowed in a position which is more than 100 m from the stem or stern, each unit should carry, in addition to the liferafts as provided in paragraph 10.3.2, a liferaft stowed as far forward or aft, or one as far forward and another as far aft, as is reasonable and practicable. Notwithstanding paragraph 10.6.6, such liferaft or liferafts may be securely fastened so as to permit manual release.

Self-elevating and column-stabilized units

10.3.4 Each unit should carry lifeboats complying with the requirements of the LSA Code, installed in at least two widely separated locations on different sides or ends of the unit. The arrangement of the lifeboats should provide sufficient capacity to accommodate the total number of persons on board if:

.1 all the lifeboats in any one location are lost or rendered unusable; or

.2 all the lifeboats on any one side, any one end, or any one corner of the unit are lost or rendered unusable.

10.3.5 In addition, each unit should carry liferafts complying with the requirements of the LSA Code and approved to the actual operating height, of such aggregate capacity as will accommodate the total number of persons on board.

10.3.6 In the case of a self-elevating unit where, due to its size or configuration, lifeboats cannot be located in widely separated locations to satisfy paragraph 10.3.4, the Administration may permit the aggregate capacity of the lifeboats to accommodate the total number of persons on board. However, the liferafts under paragraph 10.3.5 should be served by liferaft launching appliances or marine evacuation systems complying with the requirements of the LSA Code.

10.4 Survival craft muster and embarkation arrangements

10.4.1 If separate, muster stations should be provided close to the embarkation stations. Each muster station should have sufficient space to accommodate all persons assigned to muster at that station, but at least 0.35 m^2 per person.

10.4.2 Muster and embarkation stations should be readily accessible from accommodation and work areas.

10.4.3 Muster and embarkation stations should be adequately illuminated by emergency lighting.

10.4.4 Alleyways, stairways and exits giving access to the muster and embarkation stations should be adequately illuminated by emergency lighting.

10.4.5 Davit-launched survival craft muster and embarkation stations should be so arranged as to enable stretcher cases to be placed in survival craft.

10.4.6 Survival craft embarkation arrangements should be so designed that:

.1 lifeboats can be boarded and launched directly from the stowed position;

.2 davit-launched liferafts can be boarded and launched from a position immediately adjacent to the stowed position or from a position to which the liferaft is transferred prior to launching in compliance with paragraph 10.6.5; and

.3 where necessary, means should be provided for bringing the davit-launched liferaft against the unit's side and holding it alongside so that persons can be safely embarked.

10.4.7 At least two widely separated fixed metal ladders or stairways should be provided extending from the deck to the surface of the water. The fixed metal ladders or stairways and sea areas in their vicinity should be adequately illuminated by emergency lighting.

10.4.8 If fixed ladders cannot be installed, alternative means of escape with sufficient capacity to permit all persons on board to descend safely to the waterline should be provided.

10.5 Survival craft launching stations

Launching stations should be in such positions as to ensure safe launching having particular regard to clearance from any exposed propeller or steeply overhanging portions of the hull. As far as possible, launching stations should be located so that survival craft can be launched down a straight side of the unit, except for:

.1 survival craft specially designed for free-fall launching; and

.2 survival craft mounted on structures intended to provide clearance from lower structures.

10.6 Stowage of survival craft

10.6.1 Each survival craft should be stowed:

.1 so that neither the survival craft nor its stowage arrangements will interfere with the operation of any other survival craft or rescue boat at any other launching station;

.2 as near the water surface as is safe and practicable;

.3 in a state of continuous readiness so that two crew members can carry out preparations for embarkation and launching in less than 5 min;

.4 fully equipped as required by the LSA Code; however, in the case of units operating in areas such that, in the opinion of the Administration, certain items of equipment are unnecessary, the Administration may allow these items to be dispensed with;

.5 as far as practicable, in a secure and sheltered position and protected from damage by fire and explosion.

10.6.2 A survival craft or davit-launched liferaft should be so positioned that the survival craft or raft is upon embarkation at least 2 m above the waterline when the unit is in the limiting damaged condition determined in accordance with section 3.4.

10.6.3 Where appropriate, the unit should be so arranged that lifeboats, in their stowed positions, are protected from damage by heavy seas.

10.6.4 Lifeboats should be stowed attached to launching appliances.

10.6.5 Liferafts should be so stowed as to permit manual release of one raft or container at a time from their securing arrangements.

10.6.6 Davit-launched liferafts should be stowed within reach of the lifting hooks, unless some means of transfer is provided which is not rendered inoperable within the limits of trim and list prescribed in chapter 3 for any damaged condition or by unit motion or power failure.

10.6.7 Each liferaft, other than those in paragraph 10.3.3, should be stowed with the weak link of its painter permanently attached to the unit and with a float-free arrangement complying with the requirements of the LSA Code so that the liferaft will float free of any structure and, if inflatable, inflates automatically should the unit sink.

10.7 Survival craft launching and recovery arrangements

10.7.1 Launching appliances complying with the requirements of the LSA Code should be provided for all lifeboats and davit-launched liferafts.

10.7.2 Launching and recovery arrangements should be such that the appliance operator on the unit is able to observe the survival craft at all times during launching and lifeboats during recovery.

10.7.3 Only one type of release mechanism should be used for similar survival craft carried on board the unit.

10.7.4 Preparation and handling of survival craft at any one launching station should not interfere with the prompt preparation and handling of any other survival craft or rescue boat at any other station.

10.7.5 Falls, where used, should be long enough for the survival craft to reach the water with the unit under unfavourable conditions, such as maximum air-gap, lightest transit or operational condition or any damaged condition, as described in chapter 3.

10.7.6 During preparation and launching, the survival craft, its launching appliance and the area of water into which it is to be launched should be adequately illuminated by emergency lighting.

10.7.7 Means should be available to prevent any discharge of fluids on to survival craft during abandonment.

10.7.8 All lifeboats required for abandonment by the total number of persons permitted on board, should be capable of being launched with their full complement of persons and equipment within 10 min from the time the signal to abandon the unit is given.

10.7.9 Manual brakes should be so arranged that the brake is always applied unless the operator, or a mechanism activated by the operator, holds the brake control in the "off" position.

10.7.10 Each survival craft should be so arranged as to clear each leg, column, footing, brace, mat and each similar structure below the hull of a self-elevating unit and below the upper hull of a column-stabilized unit, with the unit in an intact condition. The Administration may allow a reduction in the total number of survival craft when the unit is in the transit mode and the number of personnel on board has been reduced. In such cases, sufficient survival craft to meet the provisions of this chapter, including section 10.3, should be available for use by those personnel remaining on board.

10.7.11 In any case of damage specified in chapter 3, lifeboats with an aggregate capacity of not less than 100% of persons on board should, in addition to meeting all other provisions regarding the launching and stowage contained in this chapter, be capable of being launched clear of any obstruction.

10.7.12 Consideration should be given to the location and orientation of the survival craft with reference to MODU design such that clearance of the unit is achieved in an efficient and safe manner having due regard to the capabilities of the survival craft.

10.7.13 Notwithstanding the requirement of paragraph 6.1.2.8 of the LSA Code, the speed of lowering need not be greater than 1 m/s.

10.8 Rescue boats

Each unit should carry at least one rescue boat complying with the requirements of the LSA Code. A lifeboat may be accepted as a rescue boat, provided that it and its launching and recovery arrangements also comply with the requirements for a rescue boat.

10.9 Stowage of rescue boats

Rescue boats should be stowed:

.1 in a state of continuous readiness for launching in not more than 5 min;

.2 if of an inflated type, in a fully inflated condition at all times;

.3 in a position suitable for launching and recovery;

.4 so that neither the rescue boats nor their stowage arrangements will interfere with the operation of any survival craft at any other launching station;

.5 in compliance with section 10.6, if they are also lifeboats.

10.10 Rescue boat embarkation, launching and recovery arrangements

10.10.1 The rescue boat embarkation and launching arrangements should be such that the rescue boat can be boarded and launched in the shortest possible time.

10.10.2 Launching arrangements should comply with section 10.7.

10.10.3 Rapid recovery of the rescue boat should be possible when loaded with its full complement of persons and equipment. If the rescue boat is also a lifeboat, rapid recovery should be possible when loaded with its lifeboat equipment and the approved rescue boat complement of at least six persons.

10.10.4 Rescue boat embarkation and recovery arrangements should allow for safe and efficient handling of a stretcher case. Foul weather recovery strops should be provided for safety if heavy fall blocks constitute a danger.

10.11 Lifejackets

10.11.1 A lifejacket complying with the requirements of the LSA Code, paragraphs 2.2.1 or 2.2.2 should be provided for every person on board the unit. In addition, a sufficient number of lifejackets should be stowed in suitable locations for those persons who may be on duty in locations where their lifejackets are not readily accessible. In addition, sufficient lifejackets should be available for use at remotely located survival craft positions to the satisfaction of the Administration.

10.11.2 Each lifejacket should be fitted with a lifejacket light complying with the requirements of the LSA Code.

10.12 Immersion suits and anti-exposure suits

10.12.1 Each unit should carry an immersion suit complying with the requirements of the LSA Code, and of an appropriate size, for each person on board. In addition:

.1 a sufficient number of immersion suits should be stowed in suitable locations for those persons who may be on duty in locations where their immersion suits are not readily accessible; and

.2 sufficient immersion suits should be available for use at remotely located survival craft positions to the satisfaction of the Administration.

10.12.2 In lieu of immersion suits as required by paragraph 10.12.1, an anti-exposure suit complying with the LSA Code, of an appropriate size, should be provided for every person assigned to crew the rescue boat or assigned to a marine evacuation system party.

10.12.3 Immersion suits and anti-exposure suits need not be carried if the unit is constantly in operation in warm climates[35] where, in the opinion of the Administration, they are unnecessary.

10.13 Lifebuoys

10.13.1 At least eight lifebuoys of a type complying with the LSA Code should be provided on each unit. The number and placement of lifebuoys should be such that a lifebuoy is accessible from exposed locations. Surface units should carry not less than the number of lifebuoys prescribed in the following table:

[35] Refer to the Guidelines for assessment of thermal protection (MSC/Circ.1046).

Length of unit in metres	Minimum number of lifebuoys
Under 100	8
100 and under 150	10
150 and under 200	12
200 and over	14

10.13.2 Not less than one-half of the total number of lifebuoys should be provided with self-igniting lights of an approved electric battery type complying with the LSA Code. Not less than two of these should also be provided with self-activating smoke signals and be capable of quick release from the navigating bridge, main control station, or a location readily available to operating personnel. Lifebuoys with lights and those with lights and smoke signals should be equally distributed along the accessible portions of the perimeter of the unit and should not be the lifebuoys provided with lifelines in compliance with the provisions of paragraph 10.13.3. Lifebuoys fitted with self-igniting lights or self-activating smoke signals should be located outside hazardous areas.

10.13.3 At least two lifebuoys in widely separated locations should each be fitted with a buoyant lifeline, the length of which should be at least one-and-a-half times the distance from the deck of stowage to the waterline at light draught or 30 m, whichever is greater. For self-elevating drilling units, consideration should be taken of the maximum height above the waterline, and for other drilling units the lightest operating condition. The lifeline should be so stowed that it can easily run out.

10.13.4 Each lifebuoy should be marked in block capitals of the Roman alphabet with the name and port of registry of the unit on which it is carried.

10.14 Radio life-saving appliances

Two-way VHF radiotelephone apparatus

10.14.1 All lifeboats should carry a two-way VHF radiotelephone apparatus. In addition, at least two such apparatuses should be available on the MODU, so stowed that they can be rapidly placed in any liferaft. All two-way VHF radiotelephone apparatus should conform to performance standards not inferior to those adopted by the Organization.[36]

Search and rescue locating device

10.14.2 All lifeboats should carry a search and rescue locating device. In addition, at least two search and rescue locating devices should be available on the MODU, so stowed that they can be rapidly placed in any liferaft. All search and rescue locating devices should conform to performance standards not inferior to those adopted by the Organization.[37]

---

[36] Refer to the Performance standards for survival craft two-way VHF radiotelephone apparatus, adopted by the Organization by resolution A.809(19), and to regulation III/6.2.1.2 of the 1988 SOLAS amendments which may be applied to units.

[37] Refer to the Recommendation on performance standards for survival craft radar transponders for use in search and rescue operations, adopted by the Organization by resolution A.802(19), and the Performance standards for survival craft AIS search and rescue transmitters (AIS-SART) for use in search and rescue operations, adopted by the Organization by resolution MSC.246(83).

10.15 Distress flares

Not less than 12 rocket parachute flares complying with the LSA Code should be carried and be stowed on or near the navigating bridge. If the unit does not have a navigating bridge, the flares should be stowed in a location acceptable to the Administration.

10.16 Line-throwing appliances

A line-throwing appliance complying with the requirements of the LSA Code should be provided.

10.17 Operating instructions

Illustrations and instructions should be provided on or in the vicinity of survival craft and their launching controls and should:

.1 illustrate the purpose of controls and the procedures for operating the appliance and give relevant instructions or warnings;

.2 be easily seen under emergency lighting conditions; and

.3 use symbols in accordance with the recommendations of the Organization.[38]

10.18 Operational readiness, maintenance and inspections

Operational readiness

10.18.1 Before the unit leaves port and at all times during operation and transit, all life-saving appliances should be in working order and ready for immediate use.

Maintenance

10.18.2 Instructions for on-board maintenance of life-saving appliances complying with SOLAS regulation III/36 should be provided and maintenance should be carried out accordingly.

10.18.3 The Administration may accept, in lieu of the instructions in paragraph 10.18.2, a planned maintenance programme which includes the requirements of SOLAS regulation III/36.

10.18.4 Maintenance, testing and inspections of life-saving appliances should be carried out based on the guidelines developed by the Organization[39] and in a manner having due regard to ensuring reliability of such appliances.

10.18.5 Falls used in launching should be inspected periodically[39] with special regard for areas passing through sheaves, and renewed when necessary due to deterioration of the falls or at intervals of not more than five years, whichever is the earlier.

---

[38] Refer to the Symbols related to life-saving appliances and arrangements adopted by the Organization by resolution A.760(18), as amended by resolution MSC.82(70).

[39] Refer to Measures to prevent accidents with lifeboats (MSC.1/Circ.1206/Rev.1).

Spares and repair equipment

10.18.6 Spares and repair equipment should be provided for life-saving appliances and their components which are subject to excessive wear or consumption and need to be replaced regularly.

Weekly inspections

10.18.7 The following tests and inspections should be carried out weekly:

.1 all survival craft, rescue boats and launching appliances should be visually inspected to ensure that they are ready for use. The inspection should include, but not be limited to, the condition of hooks, their attachment to the lifeboat and checking that the on-load release gear is properly and completely reset;

.2 all engines in lifeboats and rescue boats should be run ahead and astern for a total period of not less than 3 min, provided the ambient temperature is above the minimum temperature required for starting and running the engine. During this period of time, it should be demonstrated that the gear box and gear box train are engaging satisfactorily. If the special characteristics of an outboard motor fitted to a rescue boat would not allow it to be run other than with its propeller submerged for a period of 3 min, a suitable water supply may be provided;

.3 lifeboats, except free-fall lifeboats, should be moved from their stowed position, without any persons on board, to the extent necessary to demonstrate satisfactory operation of launching appliances, if weather and sea conditions so allow; and

.4 the general alarm system should be tested.

Monthly inspections

10.18.8 Inspection of the life-saving appliances, including lifeboat equipment and emergency lighting, should be carried out monthly using the checklist required by SOLAS regulation III/36 to ensure that they are complete and in good order. All lifeboats, except free-fall lifeboats, should be turned out from their stowed position without any persons on board, if weather and sea conditions so allow. A report of the inspection should be entered in the logbook.

Servicing of inflatable liferafts, inflatable lifejackets, marine evacuation systems and maintenance and repair of inflated rescue boats

10.18.9 Every inflatable liferaft, inflatable lifejacket and marine evacuation system should be serviced:

.1 at intervals not exceeding 12 months, provided where in any case this is impracticable, the Administration may extend this period to 17 months;

.2 at an approved servicing station which is competent to service them, maintains proper servicing facilities and uses only properly trained personnel[40]; and

[40] Refer to the Recommendation on conditions for the approval of servicing stations for inflatable liferafts, adopted by the Organization by resolution A.761(18).

.3 in addition to or in conjunction with the servicing intervals of marine evacuation systems under paragraph 10.18.9.1, each marine evacuation system should be deployed from the ship on a rotational basis at intervals to be agreed by the Administration provided that each system is to be deployed at least once every six years.

10.18.10 All repairs and maintenance of inflated rescue boats should be carried out in accordance with the manufacturer's instructions. Emergency repairs may be carried out on board the unit; however, permanent repairs should be carried out by an approved servicing station.

Periodic servicing of hydrostatic release units

10.18.11 Hydrostatic release units, other than disposable hydrostatic release units, should be serviced:

.1 at intervals not exceeding 12 months, provided where in any case this is impracticable the Administration may extend this period to 17 months[41];

.2 at a servicing station which is competent to service them, maintains proper servicing facilities and uses only properly trained personnel.

Periodic servicing of launching appliances and on-load release gear

10.18.12 Periodic servicing of launching appliances and on-load release gear

.1 Launching appliances should be:

.1.1 maintained in accordance with instructions for on-board maintenance in paragraph 10.18.2;

.1.2 subject to a thorough examination at the annual surveys in section 1.6; and

.1.3 upon completion of the examination referred to in paragraph 10.18.12.1.2, subjected to a dynamic test of the winch brake at maximum lowering speed. The load to be applied should be the mass of the survival craft or rescue boat without persons on board, except that, at intervals not exceeding five years, the test should be carried out with a proof load of 1.1 times the mass of the survival craft or rescue boat and its full complement of persons and equipment.

.2 Lifeboat or rescue boat on-load release gear, including free-fall lifeboat release systems should be:

.2.1 maintained in accordance with instructions for on-board maintenance in paragraph 10.18.2;

[41] Refer to Servicing of life-saving appliances and radiocommunication equipment under the harmonized system of survey and certification (HSSC) (MSC/Circ.955).

.2.2 subject to a thorough examination and operational test at the annual surveys in section 1.6 by properly trained personnel familiar with the system; and

.2.3 operationally tested under a load of 1.1 times the total mass of the lifeboat or rescue boat when loaded with its full complement of persons and equipment whenever the release gear is overhauled. Such overhauling and test should be carried out at least once every five years.[42]

.3 Davit-launched liferaft automatic release hooks should be:

.3.1 maintained in accordance with the instructions for on-board maintenance in paragraph 10.18.2;

.3.2 subject to a thorough examination and operational test at the annual surveys in section 1.6 by properly trained personnel familiar with the system; and

.3.3 operationally tested under a load of 1.1 times the total mass of the liferaft when loaded with its full complement of persons and equipment whenever the automatic release hook is overhauled. Such overhauling and test should be carried out at least once every five years.

[42] Refer to Measures to prevent accidents with lifeboats (MSC.1/Circ.1206/Rev.1).

CHAPTER 11

RADIOCOMMUNICATION AND NAVIGATION

11.1 General

The purpose of this chapter is to provide minimum provisions for navigation equipment and for distress and safety radiocommunications between mobile offshore drilling units and coast stations, ships and supporting aircraft.

11.2 Training

Training should be provided to personnel responsible for radio communications in the use of IMO Standard Marine Communication Phrases.[43]

11.3 Self-propelled units

Each unit should comply with the applicable provisions concerning radio stations for cargo ships in SOLAS chapter IV.[44]

11.4 Non-self-propelled units under tow

11.4.1 The provisions for non-self-propelled units under tow when manned depend upon the radio installations fitted in the towing ship, as set out in paragraphs 11.4.2 and 11.4.3.

11.4.2 In cases where the towing ship complies fully with all applicable requirements concerning radiocommunications for ships prescribed in SOLAS chapter IV, the unit under tow when manned should:

.1 be fitted with VHF facilities as required by SOLAS regulations IV/7.1.1[45] and 7.1.2 and with MF facilities as required by regulations IV/9.1.1 and 9.1.2;

.2 be fitted with the satellite EPIRB or EPIRB required by SOLAS regulation IV/7.1.6, as appropriate, for the area in which the unit is being towed; and

.3 be fitted with equipment for automatic reception of navigational and meteorological warnings in accordance with SOLAS regulations IV/7.1.4 and IV/7.1.5, as appropriate.

11.4.3 In cases where the towing ship does not comply fully with the applicable requirements concerning radiocommunications for ships prescribed in SOLAS chapter IV, the unit under tow when manned should comply with all the applicable provisions concerning radiocommunications prescribed in SOLAS chapter IV.[45]

---

43 Refer to IMO Standard Marine Communication Phrases, adopted by the Organization by resolution A.918(22).

44 All requirements of SOLAS chapter IV referring to "from the position the ship is normally navigated" should be applied as meaning "from the position the MODU is normally navigated".

45 All requirements of SOLAS chapter IV referring to "from the position the ship is normally navigated" should be applied as meaning "from a position which is continuously manned and which is controlling the MODU while under tow".

11.5 Units stationary at the site or engaged in drilling operations

11.5.1 Each unit, while stationary at the site, including when engaged in drilling operations, should comply with all requirements prescribed in SOLAS chapter IV that are applicable to a ship sailing through the same area.[46] Each unit should also report its position to the relevant World-Wide Navigational Warning Service (WWNWS) NAVAREA Coordinator when arriving on-site, in order for a Navigational Warning to be broadcast[47]. Additionally, units should inform the NAVAREA Coordinator when departing from that site, in order for the broadcast to be cancelled.

11.5.2 On units which do not have a navigation bridge, it should be possible to initiate transmission of the distress alerts by the radio installation specified in SOLAS regulations IV/10.1.1, IV/10.1.2, IV/10.1.4, IV/10.2.1 and IV/10.2.3, as applicable, from a position in an accessible and protected area which is acceptable to the Administration.

11.5.3 If the acoustic noise level in a room fitted with operating controls for radio equipment is so high or could be so high, during particular operating conditions, that it may disturb or prevent proper use of the radio equipment, then adequate noise protection should be provided by mechanical or other means, in association with the operating controls for the radio equipment.

11.6 Helicopter communications

In order to ensure communication with helicopters, MODUs should carry an aeromobile VHF radiotelephone station complying with the relevant requirements of ICAO[48] and suitable for communication with helicopters in its area of operation.

11.7 Internal communications

All types of MODUs should be fitted with efficient means of communication between the control room, the bridge (if provided) and position or positions fitted with facilities for operation of radio equipment.

11.8 Performance standards

All radio equipment should be of a type approved by the Administration issuing the licence. Such equipment should conform to appropriate performance standards not inferior to those adopted by the Organization.[49]

---

46 All requirements of SOLAS chapter IV referring to "from the position at which the ship is normally navigated" should be applied as meaning "from a position (or from the positions) which is continuously manned and which is controlling the MODU while stationary at the site including its drilling operations (i.e. normally the control room)".

47 Refer to the World-wide navigational warning service, adopted by the Organization by resolution A.706(17), as amended.

48 Refer to Volume 3, Part II of Annex 10, and Part III, section II of Annex 6 to the ICAO Convention.

49 Refer to the following performance standards adopted by the Organization:

.1 Resolution A.525(13): Performance standards for narrow-band direct-printing telegraph equipment for the reception of navigational and meteorological warnings and urgent information to ships.
.2 Resolution A.694(17): General requirements for shipborne radio equipment forming part of the global maritime distress and safety system (GMDSS) and for electronic navigational aids.

(*continued on next page*)

11.9 Survey of the radio station

11.9.1 The radio station of a unit should be subject to survey as specified below:

.1 by the Administration which issues the licence or its authorized representative before the radio station is put into service;

.2 when the unit is moved and comes under the administrative control of another coastal State a survey may be carried out by that State or its authorized representative;

.3 within three months before or after the anniversary date of the MODU Code certificate, a periodical survey carried out by an officer of the Administration and/or the coastal State or their respective authorized representative.

11.9.2 Satellite EPIRBs should be serviced at intervals not exceeding five years, to be performed by an approved shore-based maintenance facility.

(*continued from previous page*)

.3 Resolution A.808(19): Performance standards for ship earth stations capable of two-way communications; resolution A.570(14): Type approval of ship earth stations, and resolution MSC.130(75): Performance standards for Inmarsat ship earth stations capable of two-way communications.

.4 Resolution A.803(19): Performance standards for shipborne VHF radio installations capable of voice communication and digital selective calling, as amended, and resolution MSC.68(68), annex 1.

.5 Resolution A.804(19): Performance standards for shipborne MF radio installations capable of voice communication and digital selective calling, as amended, and resolution MSC.68(68), annex 2.

.6 Resolution A.806(19): Performance standards for shipborne MF/HF radio installations capable of voice communication, narrow-band direct-printing and digital selective calling, as amended, and resolution MSC.68(68), annex 3.

.7 Resolution A.810(19): Performance standards for float-free satellite emergency position-indicating radio beacons (EPIRBs) operating on 406 MHz; and resolution MSC.120(74): Adoption of amendments to performance standards for float-free satellite emergency position-indicating radio beacons (EPIRBs) operating on 406 MHz (resolution A.810(19)) (see also resolution A.696(17): Type approval of satellite emergency position-indicating radio beacons (EPIRBs) operating in the COSPAS-SARSAT system).

.8 Resolution A.802(19): Performance standards for survival craft radar transponders for use in search and rescue operations.

.9 Resolution A.805(19): Performance standards for float-free VHF emergency position-indicating radio beacons.

.10 Resolution A.807(19): Performance standards for Inmarsat-C ship earth stations capable of transmitting and receiving direct-printing communications, as amended, and resolution MSC.68(68), annex 3, and resolution A.570(14): Type approval of ship earth stations.

.11 Resolution A.664(16): Performance standards for enhanced group call equipment.

.12 Resolution A.812(19): Performance standards for float-free satellite emergency position-indicating radio beacons operating through the geostationary Inmarsat satellite system on 1.6 GHz.

.13 Resolution A.662(16): Performance standards for float-free release and activation arrangements for emergency radio equipment.

.14 Resolution A.699(17): System performance standard for the promulgation and co-ordination of maritime safety information using high-frequency narrow-band direct printing.

.15 Resolution MSC.148(77): Adoption of the revised performance standards for narrow-band direct-printing telegraph equipment for the reception of navigational and meteorological warnings and urgent information to ships (NAVTEX).

.16 Resolution A.811(19): Performance standards for a shipborne integrated radiocommunication system (IRCS) when used in the GMDSS.

.17 Resolution MSC.80(70), annex 1: Performance standards for on-scene (aeronautical) two-way portable VHF radiotelephone apparatus.

11.9.3 The Administration may recognize the coastal State as its authorized representative.

11.9.4 In every case when an authorized representative of the coastal State carries out an inspection, a report should be issued and kept with the radio documents, and a copy, if requested, should be forwarded to the Administration.

11.10 Navigation equipment

11.10.1 All units should comply with SOLAS chapter V.

11.10.2 Administrations may exempt units from navigation equipment carriage requirements, in accordance with SOLAS regulation V/3.

CHAPTER 12

LIFTING DEVICES, PERSONNEL AND PILOT TRANSFER

12.1 Cranes

12.1.1 Each crane, including its supporting structure, which is used for the transfer of material, equipment or personnel between the unit and attending vessels should be of a design and construction to the satisfaction of the Administration and adequate for the service intended in accordance with the requirements of a recognized classification society or with national or international standards or codes.

12.1.2 Cranes should be so located and protected as to reduce to a minimum any danger to personnel, due regard being paid to moving parts or other hazards. Their design should have regard to the materials used in construction, the working conditions to which they will be subjected and the environmental conditions. Adequate provisions should be made to facilitate cleaning, inspection and maintenance.

12.1.3 Consideration should be given to the failure mode for each crane in the event of extreme overload so that the crane operator is exposed to minimum danger.

12.1.4 An officer of the Administration or a duly authorized person or organization should survey the installation of each crane, with particular regard to its supporting structure.

12.1.5 After each crane has been erected on board, and before it is placed in service, operational and load tests should be conducted. These tests should be witnessed and verified by an officer of the Administration or a duly authorized person or organization. A record of these tests and other information concerning initial certification should be readily available.

12.1.6 Each crane should be examined at intervals not exceeding 12 months. It should be further tested and recertified, at intervals not exceeding five years, or after substantial alteration or repairs. These tests should be witnessed and verified by an officer of the Administration or a duly authorized person or organization. A record of these examinations, tests and certifications should be readily available.

12.1.7 Cranes used for loading and discharging of offshore supply vessels should be furnished with rating tables or curves which take into account the dynamics associated with the unit's and vessel's motions.

12.1.8 Except when loads are determined and marked prior to lifting, each crane should be fitted, to the satisfaction of the Administration, with a safety device to give the crane operator a continuous indication of hook load and rated load for each radius. The indicator should give a clear and continuous warning when approaching the rated capacity of the crane.

12.1.9 The Administration should give consideration to the installation of limit switches to provide for the safe operation of the crane.

12.1.10 A crane manual should be provided for each crane and should be readily available. This manual should contain full information concerning:

.1 design standard, operation, erection, dismantling and transportation;

.2 all limitations during normal and emergency operations with respect to safe working load, safe working moment, maximum wind, maximum heel and trim, design temperatures and braking systems;

.3 all safety devices;

.4 testing of the emergency lowering system for personnel transfer, if fitted;

.5 diagrams for electrical, hydraulic and pneumatic systems and equipment;

.6 materials used in construction, welding procedures and extent of non-destructive testing; and

.7 guidance on maintenance and periodic inspection.

12.2 Lifting and hoisting equipment

12.2.1 All lifting and hoisting equipment, including its supporting structure, should be of a design and construction to the satisfaction of the Administration and adequate for the service intended in accordance with the requirements of a recognized classification society or with national or international standards or codes.

12.2.2 Information on the rated capacity of all lifting and hoisting equipment, developed in accordance with national or international standards or codes, should be available on the unit.

12.3 Personnel lifts

12.3.1 Personnel lifts should be of a design acceptable to the Administration and adequate for the service intended.

12.3.2 The construction and installation should be surveyed by an officer of the Administration or a duly authorized person or organization. The inspections should be carried out on installation and at intervals not exceeding 12 months and certificates or reports should be readily available.

12.3.3 Each lift car in a column of a column-stabilized unit should provide for an emergency exit with an escape ladder in the hoistway.

12.4 Personnel and pilot transfer

12.4.1 All personnel transfer nets or platforms should be designed and constructed to the satisfaction of the Administration.

12.4.2 A personnel transfer net or platform may be used to satisfy the pilot transfer arrangement required by SOLAS regulation V/23.

12.5 Drilling derricks

The design of each drilling derrick and its supporting structure should be to the satisfaction of the Administration. The rated capacity for each reeving should be included in the operating manual.

CHAPTER 13

HELICOPTER FACILITIES[50]

13.1 General

Each helideck should be of sufficient size and located so as to provide a clear take-off and approach to enable the largest helicopter using the helideck to operate under the most severe conditions anticipated for helicopter operations.

13.2 Definitions

13.2.1 *Final approach and take-off area (FATO)* is a defined area over which the final phase of the approach manoeuvre to hover or landing of the helicopter is intended to be completed and from which the take-off manoeuvre is intended to be commenced.

13.2.2 *Limited obstacle sector (LOS)* is a sector extending outward which is formed by that portion of the 360° arc, excluding the obstacle-free sector, the centre of which is the reference point from which the obstacle-free sector is determined. Obstacles within the limited obstacle sector are limited to specified heights.

13.2.3 *Obstacle* is any object, or part thereof, that is located on an area intended for the movement of a helicopter on a helideck or that extends above a defined surface intended to protect a helicopter in flight.

13.2.4 *Obstacle-free sector* is a complex surface originating at, and extending from, a reference point on the edge of the FATO of a helideck, comprised of two components, one above and one below the helideck for the purpose of flight safety within which only specified obstacles are permitted.

13.2.5 *Touchdown and lift-off area (TLOF)* is a dynamic load-bearing area on which a helicopter may touch down or lift off. For a helideck it is presumed that the FATO and the TLOF will be coincidental.

13.3 Construction

13.3.1 The helideck should be of a design and construction, adequate for the intended service and for the appropriate prevailing climatic conditions, approved to the satisfaction of the Administration.

13.3.2 Except as provided for in paragraph 13.3.3, the helideck should meet the following provisions, with reference to the ICAO Convention, Annex 14, Volume II (Heliports), taking into account the type of helicopter used, the conditions of wind, turbulence, sea state, water temperature and icing conditions:

---

[50] Reference is made to regulations of national civil aviation authorities in the unit's area of operation, applicable international standards of the International Civil Aviation Organization (ICAO) and recommended practices developed in accordance with the Memorandum of Understanding between IMO and ICAO.

.1 the helideck should be of sufficient size to contain an area within which can be drawn a circle of diameter not less than *D* for single main rotor helicopters;

.2 a helideck obstacle-free sector should comprise of two components, one above and one below helideck level (see figure 13-1):

.2.1 above helideck level: The surface should be a horizontal plane level with the elevation of the helideck surface that subtends an arc of at least 210° with the apex located on the periphery of the *D* reference circle extending outwards to a distance that will allow for an unobstructed departure path appropriate to the helicopter(s) the helideck is intended to serve; and

.2.2 below helideck level: Within the (minimum) 210° arc, the surface should additionally extend downward at a 5:1 falling gradient from the edge of the safety net below the elevation of the helideck to water level for an arc of not less than 180° that passes through the centre of the FATO and outwards to a distance that will allow for safe clearance from the obstacles below the helideck in the event of an engine failure for the type of helicopter(s) the helideck is intended to serve (see figure 13-1);

.3 for single main rotor helicopters, within the 150° LOS out to a distance of 0.12 *D*, measured from the point of origin of the LOS, objects should not exceed a height of 0.25 m above the helideck. Beyond that arc, out to a distance of an additional 0.21 *D*, the maximum obstacle height is limited to a gradient of one unit vertically for each two units horizontally originating at a height of 0.05 *D* above the level of the helideck (see figure 13-2[51]);

.4 objects the function of which requires that they be located on the helideck within the FATO should be limited to landing nets (where required) and certain lighting systems and should not exceed the surface of the landing area by more than 0.025 m. Such objects should only be present provided they do not cause a hazard to helicopter operations; and

.5 operations by tandem main rotor helicopters should be specially considered by the Administration.

13.3.3 For benign climates as determined by the coastal State, taking into account the type of helicopter used, the conditions of wind, turbulence, sea state, water temperature and icing conditions, the helideck should meet the following:

.1 the helideck should be of sufficient size to contain a circle of diameter no less than 0.83 *D*;

.2 a helideck obstacle-free sector shall comprise of two components, one above and one below helideck level (see figure 13-1):

[51] Where the dynamic load bearing area of the helideck enclosed by the *FATO* perimeter marking is a shape other than circular, the extent of the LOS segments are represented as lines parallel to the perimeter of the landing area rather than arcs. Figure 13-2 has been constructed on the assumption that an octagonal helideck is provided.

.2.1 above helideck level: The surface should be a horizontal plane level with the elevation of the helideck surface that subtends an arc of at least 210° with the apex located on the periphery of the D reference circle extending outwards to a distance that will allow for an unobstructed departure path appropriate to the helicopter(s) the helideck is intended to serve, and

.2.2 below helideck level: Within the (minimum) 210° arc, the surface should additionally extend downward at a 5:1 falling gradient from the edge of the safety net below the elevation of the helideck to water level for an arc of not less than 180° that passes through the centre of the FATO and outwards to a distance that will allow for safe clearance from the obstacles below the helideck in the event of an engine failure for the type of helicopter(s) the helideck is intended to serve (see figure 13-1);

.3 for single main rotor helicopters, within 0.415 *D* to 0.5 *D* objects should not exceed a height of 0.025 m. Within the 150° LOS out to a distance of 0.12 *D*, measured from the point of origin of the LOS, objects should not exceed a height of 0.05 m above the helideck. Beyond that arc, out to a distance of an additional 0.21 *D*, the LOS rises at a rate of one unit vertically for each two units horizontally originating at a height of 0.05 *D* above the level of the helideck (refer to figure 13-3[52]);

.4 objects the function of which requires that they be located on the helideck within the *FATO* should be limited to landing nets (where required) and certain lighting systems and should not exceed the surface of the landing area by more than 0.025 m. Such objects should only be present provided they do not cause a hazard to helicopter operations; and

.5 operations by tandem main rotor helicopters should be specially considered by the Administration.

13.3.4 The helideck should have a skid-resistant surface.

13.3.5 Where the helideck is constructed in the form of a grating, the underdeck should be such that the ground effect is maintained.

13.4 Arrangements

13.4.1 The helideck should have recessed tie-down points for securing a helicopter.

13.4.2 The periphery of the helideck should be fitted with a safety net except where structural protection exists. The net should be inclined upwards at an angle of 10° and outwards from below the edge of the helideck to a horizontal distance of 1.5 m and should not rise above the edge of the deck.

13.4.3 The helideck should have both a main and an emergency personnel access route located as far apart from each other as practicable.

---

[52] Where the dynamic load bearing area of the helideck enclosed by the FATO perimeter marking is a shape other than circular, the extent of the LOS segments are represented as lines parallel to the perimeter of the landing area rather than arcs. Figure 13-3 has been constructed on the assumption that an octagonal helideck is provided.

13.4.4 Reference should be made to paragraph 9.16.5 concerning helideck drainage.

13.5 Visual aids

Wind direction indicator

13.5.1 A wind direction indicator should be located on the unit which, in so far as is practicable, indicates the wind conditions over the TLOF in such a way as to be free from the effects of airflow disturbances caused by nearby objects or rotor downwash. It should be visible from a helicopter in flight or in a hover over the helideck. Where the TLOF may be subject to a disturbed air flow then additional wind direction indicators located close to the area should be provided to indicate the surface wind on those areas. Placement of the wind direction indicators should not compromise obstacle-protected surfaces.

13.5.2 Units on which night helicopter operations take place should have provisions to illuminate the wind direction indicators.

13.5.3 A wind direction indicator should be a truncated cone made of lightweight fabric and should have the following minimum dimensions:

Length	1.2 m
Diameter (larger end)	0.3 m
Diameter (smaller end)	0.15 m

13.5.4 The colour of the wind direction indicator should be so selected as to make it clearly visible and understandable from a height of at least 200 m above the heliport, having regard to background. Where practicable, a single colour, preferably white or orange, should be used. Where a combination of two colours is required to give adequate conspicuity against changing backgrounds, they should preferably be orange and white, or red and white, and should be arranged in five alternate bands the first and last band being the darker colour.

Heliport identification marking

13.5.5 A heliport identification marking should be located at the centre of the touchdown/positioning marking described in paragraphs 13.5.12 to 13.5.14. It should consist of a white "**H**" that is 4 m high, 3 m wide, with a stroke width of 0.75 m.

D-value marking

13.5.6 The actual *D*-value of the helideck should be painted on the helideck inboard of the chevron provided in accordance with paragraph 13.5.15 in alphanumeric symbols of 0.1 m in height.

13.5.7 The helideck *D*-value should also be marked around the perimeter of the helideck in the manner shown in figure 13-5 in a colour contrasting (preferably white: avoid black or grey for night use) with the helideck surface. The *D*-value should be to the nearest whole number with 0.5 rounded down, e.g., 18.5 marked as 18. Markings for some helicopters may require special consideration.[53]

[53] Helidecks designed specifically for AS332L2 and EC 225 helicopters, each having a *D*-value of 19.5 m, should be rounded up to 20 in order to differentiate between helidecks designed specifically for L1 models.

Maximum allowable mass marking

13.5.8 A maximum allowable mass marking should be located within the TLOF and so arranged as to be readable from the preferred final approach direction, i.e. towards the obstacle-free sector origin.

13.5.9 The maximum allowable mass marking should consist of a two- or three-digit number followed by a letter "t" to indicate the allowable helicopter mass in tonnes (1,000 kg). The marking should be expressed to one decimal place, rounded to the nearest 100 kg. Where States require that a maximum allowable weight is indicated in pounds, the marking should consist of a two- or three-digit number to indicate the allowable helicopter weight in thousands of pounds, rounded to the nearest 1,000 pounds.

13.5.10 The height of the figures should be 0.9 m with a line width of approximately 0.12 m and be in a colour (preferably white) which contrasts with the helideck surface. Where possible the mass marking should be well separated from the installation identification marking in order to avoid possible confusion on recognition.

TLOF perimeter marking

13.5.11 The TLOF perimeter marking should be located along the perimeter of the TLOF and should consist of a continuous white line with a width of at least 0.3 m. TLOF perimeter markings are typically for a 1 *D* or 0.83 *D* value (see figures 13-2 and 13-3).

Touchdown/positioning marking

13.5.12 A touchdown/positioning marking should be located so that when the pilot's seat is over the marking the whole of the undercarriage will be within the TLOF and all parts of the helicopter will be clear of any obstacle by a safe margin.

13.5.13 The centre of the touchdown/positioning marking should be concentric to the centre of the TLOF.[54]

13.5.14 A touchdown/positioning marking should be a yellow circle and have a line width of 1 m. The inner diameter of the circle should be half the *D*-value of the largest helicopter for which the TLOF is designed.

Helideck obstacle-free sector marking

13.5.15 Except as provided in paragraph 13.5.16, a helideck obstacle-free sector marking should be located on the TLOF perimeter marking and indicated by the use of a black chevron, each leg being 0.8 m long and 0.1 m wide forming the angle in the manner shown in figure 13-5. The obstacle-free sector marking should indicate the origin of the obstacle-free sector, the directions of the limits of the sector and the verified *D*-value of the helideck. Should there not be room to place the chevron where indicated, the chevron marking, but not the point of origin, may be displaced towards the circle centre.

---

[54] The marking may be offset away from the origin of the obstacle-free sector by no more than 0.1 D where an aeronautical study indicates such offsetting to be beneficial, provided that the offset marking does not adversely affect the safety of operations.

13.5.16 For a helideck less than 1 *D* (i.e. a helideck meeting paragraph 13.3.3), a helideck obstacle free sector marking should be located at a distance from the centre of the TLOF equal to the radius of the largest circle which can be drawn in the TLOF or 0.5 *D* whichever is greater.

13.5.17 The height of the chevron should equal the width of the TLOF perimeter marking, but should be not less than 0.3 m. The chevron should be black in colour and may be painted on top of the TLOF perimeter marking in paragraph 13.5.11.

Unit identification markings

13.5.18 The name of the unit should be clearly displayed on unit identification panels located in such positions that the unit can be readily identified from the air and sea from all normal angles and directions of approach. The height of the figures should be at least 0.9 m with a line width of approximately 0.12 m. The unit identification panels should be highly visible in all light conditions and located high up on the unit (e.g., on the derrick). Suitable illumination should be provided for use at night and in conditions of poor visibility.

13.5.19 The unit's name should be provided on the helideck and be positioned on the obstacle side of the touchdown/positioning marking with characters not less than 1.2 m in height and in a colour contrasting with the background.

Perimeter lights

13.5.20 The perimeter of the TLOF should be delineated by green lights visible omnidirectionally from on or above the landing area. These lights should be above the level of the deck but should not exceed 0.25 m in height for helidecks sized in accordance with paragraph 13.3.2 and 0.05 m in height for helidecks sized in accordance with paragraph 13.3.3. The lights should be equally spaced at intervals of not more than 3 m around the perimeter of the TLOF, coincident with the white line delineating the perimeter in paragraph 13.5.10. In the case of square or rectangular decks there should be a minimum of four lights along each side including a light at each corner of the TLOF. Flush fitting lights may be used at the inboard (150° limited obstacle sector origin) edge of the TLOF where there is a need to move a helicopter or large equipment off the TLOF.

13.5.21 Perimeter lights should meet the chromaticity characteristics given in table 13-1, and the vertical beam spread and intensity characteristics given in table 13-2.

Table 13-1 – Perimeter lighting chromaticity

Yellow boundary	$x = 0.36 – 0.08y$
White boundary	$x = 0.65y$
Blue boundary	$y = 0.9 – 0.171x$

Table 13-2 – Green perimeter lighting intensity

Elevation	Intensity (cd)
0° – 90°	60 max*
>20° – 90°	3 min
>10° – 20°	15 min
0° – 10°	30 min
Azimuth +180° -180°	

* If higher intensity lighting is provided to assist in conditions of poor visibility during daylight, it should incorporate a control to reduce the intensity to not more than 60 cd for night use.

Helideck floodlights

13.5.22 Helideck floodlights should be located so as to avoid glare to pilots, and provision should be made for periodically checking their alignment. The arrangements and aiming of floodlights should be such that helideck markings are illuminated and that shadows are kept to a minimum. Floodlights should conform to the same height limitations specified in paragraph 13.5.20 for perimeter lights.

Obstacle marking and lighting

13.5.23 Fixed obstacles and permanent equipment, such as crane booms or the legs of self-elevating units, which may present a hazard to helicopters, should be readily visible from the air during daylight. If a paint scheme is necessary to enhance identification by day, alternate black and white, black and yellow, or red and white bands are recommended, not less than 0.5 m nor more than 6 m wide.

13.5.24 Omnidirectional red lights of at least 10 cd intensity should be fitted at suitable locations to provide the helicopter pilot with visual information on objects which may present a hazard to helicopters and on the proximity and height of objects which are higher than the landing area and which are close to it or to the limited obstacle sector boundary. Such lighting should comply with the following:

.1 Objects which are more than 15 m higher than the landing area should be fitted with intermediate red lights of the same intensity spaced at 10 m intervals down to the level of the landing area (except where such lights would be obscured by other objects).

.2 Structures such as flare booms and towers may be illuminated by floodlights as an alternative to fitting the intermediate red lights, provided that such lights should be arranged such that they will illuminate the whole of the structure and not interfere with the helicopter pilot's night vision.

.3 On self-elevating units the leg(s) nearest the helideck may be illuminated by floodlights as an alternative to fitting the intermediate red lights, provided that such lights should be arranged such that they will not interfere with the helicopter pilot's night vision.

.4 Alternative equivalent technologies to highlight dominant obstacles in the vicinity of the helideck may be utilized in accordance with the recommendations of the ICAO.

13.5.25 An omnidirectional red light of intensity 25 to 200 cd should be fitted to the highest point of the unit and, in the case of self-elevating units, as near as practicable to the highest point of each leg. Where this is not practicable (e.g., flare towers) the light should be fitted as near to the extremity as possible.

Status lights

13.5.26 Status lights should be installed to provide warning that a condition exists on the unit which may be hazardous for the helicopter or its occupants. The status lights should be a flashing red light[55] (or lights), visible to the pilot from any direction of approach and on any landing heading. The system should be automatically initiated when the toxic gas alarm under paragraph 5.7.2 is initiated as well as being capable of manual activation at the helideck. It should be visible at a range in excess of the distance at which the helicopter may be endangered or may be commencing a visual approach. The status light system should:

.1 be installed either on or adjacent to the helideck. Additional lights may be installed in other locations on the unit where this is necessary to meet the requirement that the signal be visible from all approach directions, i.e. 360° in azimuth;

.2 have an effective intensity of at least 700 cd between 2° and 10° above the horizontal and at least 176 cd at all other angles of elevation;

.3 be provided with a facility to enable the output of the lights (if and when activated) to be dimmed to an intensity not exceeding 60 cd while the helicopter is landed on the helideck;

.4 be visible from all possible approach directions and while the helicopter is landed on the helideck, regardless of heading with a vertical beam spread as describe above;

.5 use lights that are 'red' as defined by ICAO[56];

.6 flash at a rate of 120 flashes per minute and, if two or more lights are needed to meet this requirement, they should be synchronised to ensure an equal time gap (to within 10%) between flashes. Provision should be made to reduce the flash rate to 60 flashes per minute should a helicopter be on the helideck. The maximum duty cycle should be no greater than 50%;

.7 have facilities at the helideck to manually override the automatic activation of the system;

---

55 The aeronautical meaning of a flashing red light is either "do not land, aerodrome not available for landing" or "move clear of landing area".

56 Reference is made to the ICAO Convention, Annex 14, Volume 1, Appendix 1, Colours for aeronautical ground lights.

.8 reach full intensity in not less than three seconds at all times;

.9 be designed so that no single failure will prevent the system operating effectively. In the event that more than one light unit is used to meet the flash rate requirement, a reduced flash frequency of at least 60 flashes per minute is acceptable in the failed condition for a limited period; and

.10 where supplementary 'repeater' lights are employed for the purposes of achieving the 'on deck' 360° coverage in azimuth, these should have a minimum intensity of 16 cd and a maximum intensity of 60 cd for all angles of azimuth and elevation.

13.6 Motion sensing system

Vessel motions represent a potential hazard to helicopter operations. Surface units should be equipped with an electronic motion-sensing system capable of measuring or calculating the magnitude and rate of pitch roll and heave at the helideck about the true vertical datum. A motion-sensing system display should be located at the aeromobile VHF radiotelephone station provided in accordance with section 11.6, so that this information may be relayed to the helicopter pilot. The form of the report should be agreed with the aeronautical service provider.

13.7 Exemptions

Administrations should consider exemptions from or equivalencies to the provisions of this chapter regarding markings and landing aids when:

.1 the Administration is provided with evidence that the coastal State in whose waters the MODU is operating has notified the ICAO of differences to its requirements for visual aids; or

.2 the Administration is provided with evidence that the coastal State in whose waters the MODU is operating has established requirements for visual aids that differ from the provisions of this chapter.

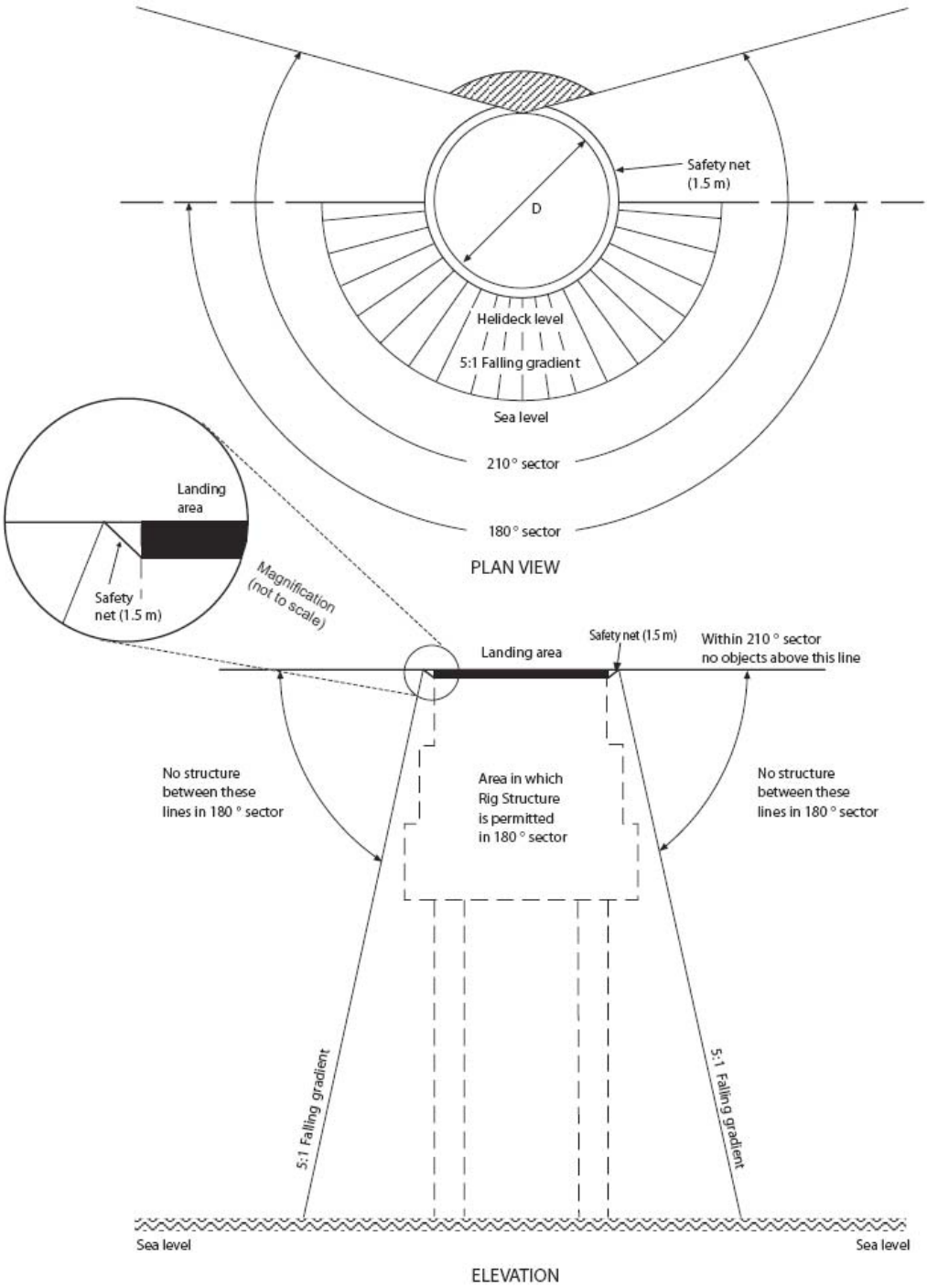

Figure 13-1 – Obstacle free areas – below landing area level

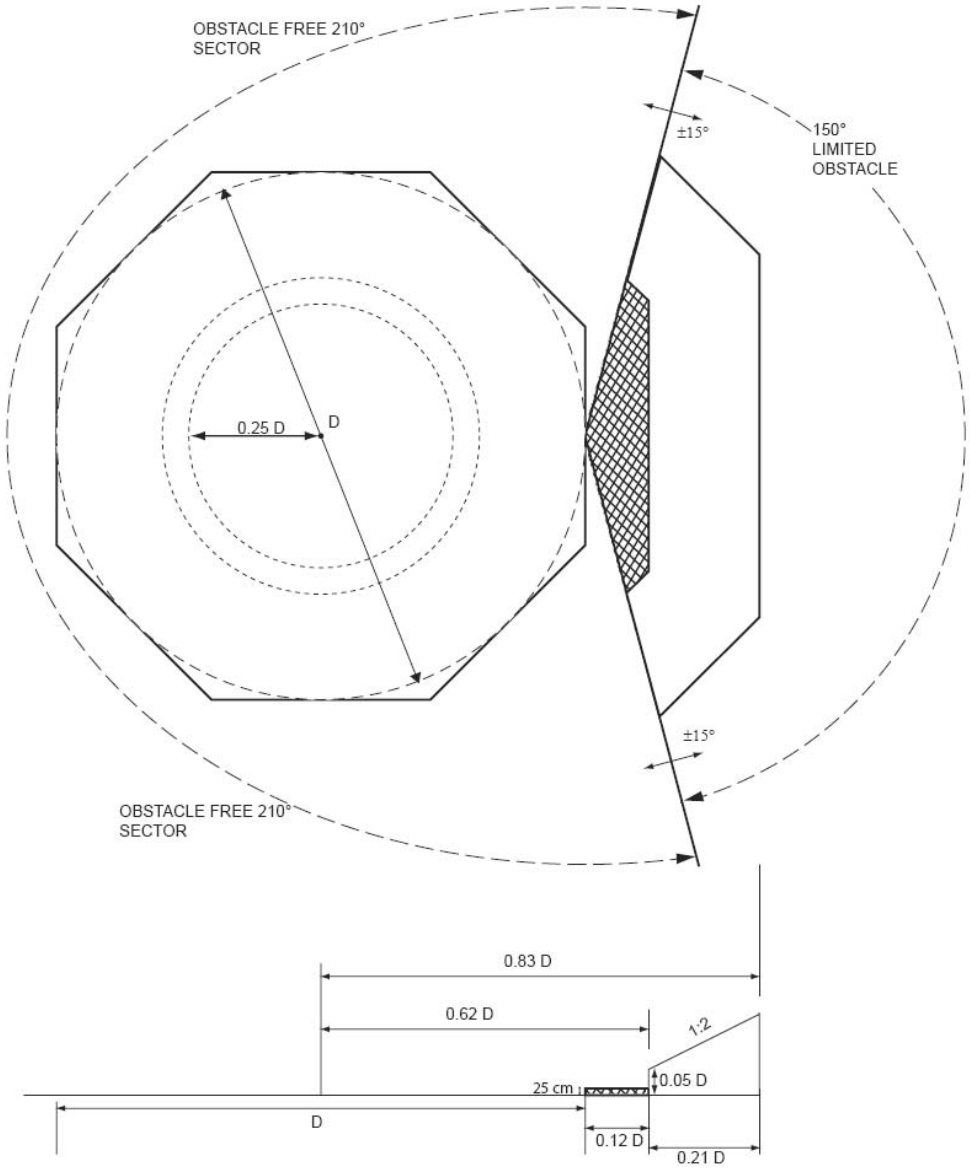

Figure 13-2 – Helideck obstacle limitation sector: single main rotor helicopters

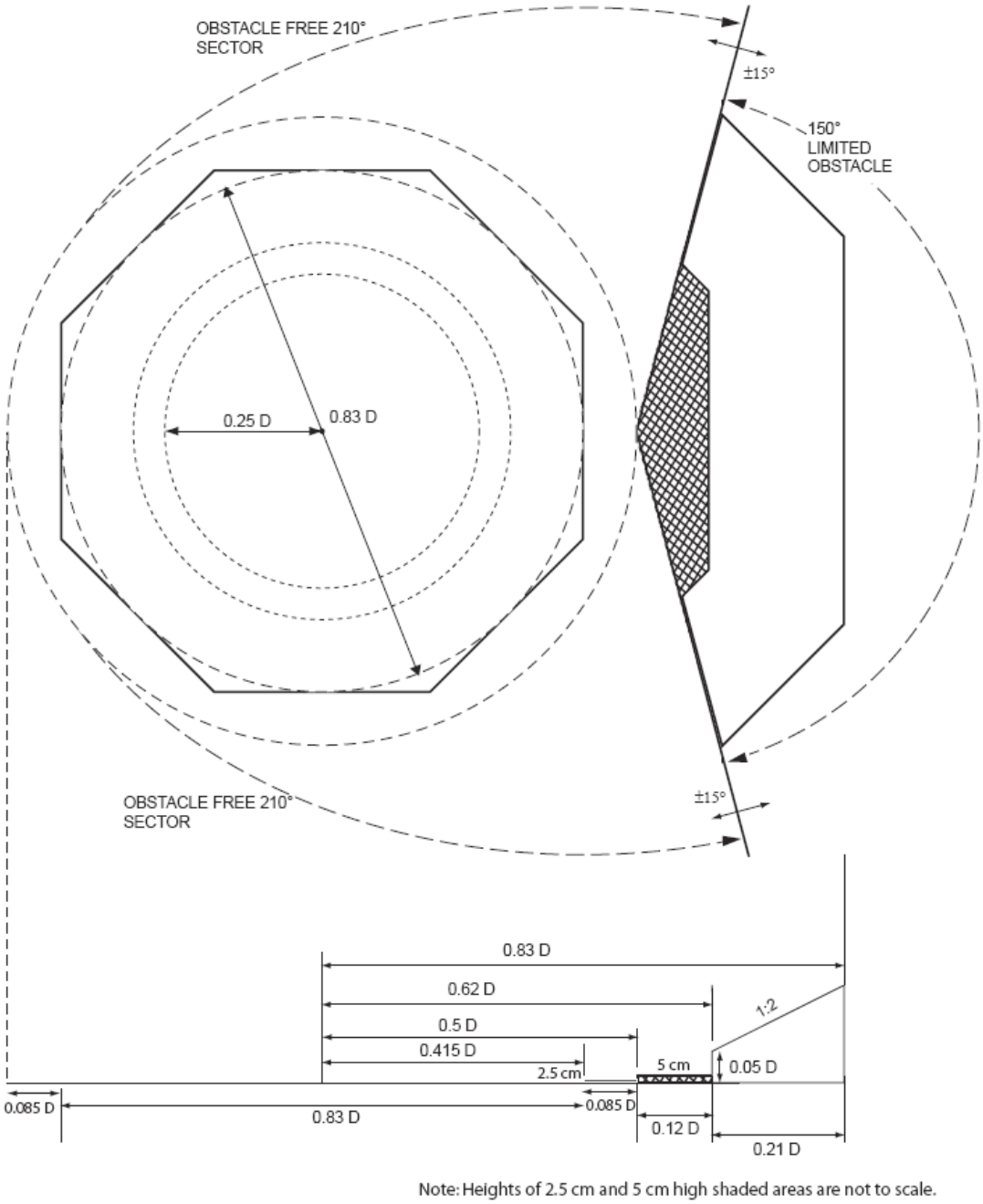

Figure 13-3 – Helideck obstacle limitation sector: single main rotor helicopters for benign climate conditions as accepted by the coastal State

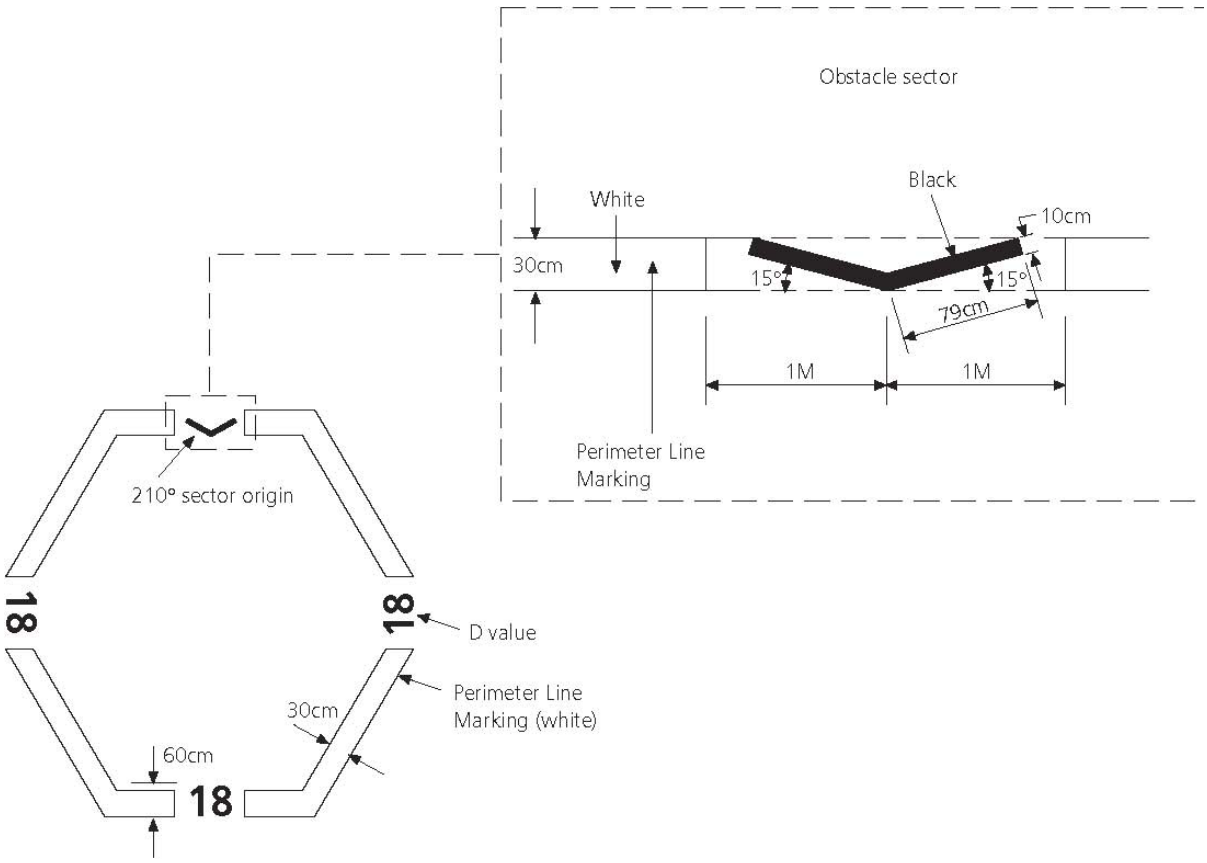

Figure 13-4 – Obstacle-free sector marking

CHAPTER 14

OPERATIONS

14.1 Operating manuals

14.1.1 Operating manuals containing guidance for the safe operation of the unit for both normal and envisaged emergency conditions, approved by the Administration, should be provided on board and be readily available to all concerned. The manuals should, in addition to providing the necessary general information about the unit, contain guidance on and procedures for the operations that are vital to the safety of personnel and the unit. The manuals should be concise and be compiled in such a manner that they are easily understood. Each manual should be provided with a contents list, an index and wherever possible be cross-referenced to additional detailed information which should be readily available on board.

14.1.2 The operating manual for normal operations should include the following general descriptive information, where applicable:

.1 a description and particulars of the unit;

.2 a chain of command with general responsibilities during normal operation;

.3 limiting design data for each mode of operation, including draughts, air gap, wave height, wave period, wind, current, sea and air temperatures, assumed seabed conditions, and any other applicable environmental factors, such as icing;

.4 a description of any inherent operational limitations for each mode of operation and for each change in mode of operation;

.5 the location of watertight and weathertight boundaries, the location and type of watertight and weathertight closures and the location of downflooding points;

.6 the location, type and quantities of permanent ballast installed on the unit;

.7 a description of the general emergency, toxic gas (hydrogen sulphide), combustible gas, fire alarm and abandon unit signals;

.8 for self-elevating units, information regarding the preparation of the unit to avoid structural damage during the setting or retraction of legs on or from the seabed or during extreme weather conditions while in transit, including the positioning and securing of legs, cantilever drill floor structures and drilling equipment or materials which might shift position;

.9 light ship data together with a comprehensive listing of the inclusions and exclusions of semi-permanent equipment;

.10 stability information setting forth the allowable maximum height of the centre of gravity in relation to draught data or other parameters based upon compliance with the intact and damage criteria;

.11 a capacity plan showing the capacities and the vertical, longitudinal and transverse centres of gravity of tanks and bulk material stowage spaces;

.12 tank sounding tables or curves showing capacities, the vertical, longitudinal and transverse centres of gravity in graduated intervals and the free surface data of each tank;

.13 acceptable structural deck loadings;

.14 identification of helicopters suited for the design of the helideck and any limiting conditions of operation;

.15 identification and classification of hazardous areas on the unit;

.16 description and limitations of any on-board computer used in operations such as ballasting, anchoring, dynamic positioning and in trim and stability calculations;

.17 description of towing arrangements and limiting conditions of operation;

.18 description of the main power system and limiting conditions of operation; and

.19 a list of key plans and schematics.

14.1.3 The operating manual for normal operations should also include, where applicable:

.1 guidance for the maintenance of adequate stability and the use of the stability data;

.2 guidance for the routine recording of lightweight alterations;

.3 examples of loading conditions for each mode of operation and instructions for developing other acceptable loading conditions, including the vertical components of the forces in the anchor cables;

.4 for column-stabilized units, a description, schematic diagram and guidance for the operation of the ballast system and of the alternative means of ballast system operation, together with a description of its limitations, such as pumping capacities at various angles of heel and trim;

.5 a description, schematic diagram, guidance for the operation of the bilge system and of the alternative means of bilge system operation, together with a description of its limitations, such as draining of spaces not directly connected to the bilge system;

.6 fuel oil storage and transfer procedures;

.7 procedures for changing modes of operation;

.8 guidance on severe weather operations and time required to meet severe storm conditions, including provisions regarding lowering or stowage of equipment, and any inherent operational limitations;

.9 description of the anchoring arrangements and anchoring or mooring procedures and any limiting factors;

.10 personnel transfer procedures;

.11 procedures for the arrival, departure and fuelling of helicopters;

.12 limiting conditions of crane operations;

.13 description of the dynamic positioning systems and limiting conditions of operation;

.14 procedures for ensuring that the requirements of applicable international codes for the stowage and handling of dangerous and radioactive materials are met;

.15 guidance for the placement and safe operation of the well testing equipment. The areas around possible sources of gas release should be classified in accordance with section 6.1 for the duration of well test operations;

.16 procedures for receiving vessels alongside; and

.17 guidance on safe towing operations such as to reduce to a minimum any danger to personnel during towing operations.

14.1.4 The operating manual for emergency operations should include, where applicable:

.1 description of fire-extinguishing systems and equipment;

.2 description of the life-saving appliances and means of escape;

.3 description of the emergency power system and limiting conditions of operation;

.4 a list of key plans and schematics which may be useful during emergency situations;

.5 general procedures for deballasting or counterflooding and the closure of all openings which may lead to progressive flooding in the event of damage;

.6 guidance for the person in charge in determining the cause of unexpected list and trim and assessing the potential affects of corrective measures on unit survivability, i.e. strength, stability, buoyancy, etc.;

.7 special procedures in the event of an uncontrolled escape of hydrocarbons or hydrogen sulphide, including emergency shutdown;

.8 guidance on the restoration of mechanical, electrical and ventilation systems after main power failure or emergency shutdown; and

.9 ice alert procedures.

14.1.5 The information provided in the operating manuals should, where necessary, be supported by additional material provided in the form of plans, manufacturers' manuals and other data necessary for the efficient operation and maintenance of the unit. Detailed information provided in manufacturers' manuals need not be repeated in the operating manuals. The information should be referenced in the operating manual, readily identified, located in an easily accessible place on the unit and be available at all times.

14.1.6 Operating and maintenance instructions and engineering drawings for ship machinery and equipment essential to the safe operation of the ship should be written in a language understandable by those officers and crew members who are required to understand such information in the performance of their duties.

14.2 Helicopter facilities

14.2.1 The operating manual for normal operations under paragraph 14.1.3 should include a description and a checklist of safety precautions, procedures and equipment requirements.

14.2.2 If refuelling capability is to be provided, the procedures and precautions to be followed during refuelling operations should be in accordance with recognized safe practices and contained in the operations manual.

14.2.3 Fire-fighting personnel, consisting of at least two persons trained for rescue and fire-fighting duties, and fire-fighting equipment should be immediately available when the helicopter is about to land, landing, refuelling, or during take-off.

14.2.4 Fire-fighting personnel should be present during refuelling operations. However, the fire-fighting personnel should not be involved with refuelling activities.

14.3 Material safety data sheets

Units carrying oil fuel, as defined in regulation 1 of Annex I of the International Convention for the Prevention of Pollution from Ships, 1973, as modified by the Protocol of 1978 relating thereto, should be provided with material safety data sheets, based on the recommendations developed by the Organization[57], prior to the bunkering of oil fuel.

14.4 Dangerous goods

14.4.1 Dangerous goods should be stored safely and appropriately according to the nature of the goods. Incompatible goods should be segregated from one another.

14.4.2 Explosives which present a serious risk should be stored in a suitable magazine which should be kept securely closed. Such explosives should be segregated from detonators. Electrical apparatus and cables in any compartment in which it is intended to store explosives should be designed and used so as to minimize the risk of fire or explosion.

14.4.3 Flammable liquids which give off dangerous vapours and flammable gases should be stored in a well-ventilated space or on deck.

---

[57] Refer to the Recommendation for material safety data sheets (MSDS) for MARPOL Annex I cargoes and marine fuel oils, adopted by the Organization by resolution MSC.150(77), as may be amended.

14.4.4 Substances which are liable to spontaneous heating or combustion should not be carried unless adequate precautions have been taken to prevent the outbreak of fire.

14.4.5 Radioactive substances should be stored and handled in a safe manner.

14.5 Pollution prevention

Provision should be made such that the unit can comply with the requirements of international conventions in force.

14.6 Transfer of material, equipment or personnel

14.6.1 Transfer operations, including the weights of loads to be handled, any limiting conditions of operation and emergency procedures should be discussed and agreed between personnel on the unit and on attending vessels prior to commencement of such transfers. Direct communications should be maintained with the crane operator throughout such operations.

14.6.2 Where appropriate to the operation, the unit should be equipped with at least two independent means for mooring attending vessels. The mooring positions should be such that sufficient crane capacity in terms of lift and outreach is available to handle loads in a safe manner.

14.6.3 The arrangement of mooring attachments on the unit to facilitate transfer operations should have regard to the risk of damage should the attending vessel come in contact with the unit.

14.6.4 The mooring arrangements and procedures should be such as to reduce to a minimum any danger to personnel during mooring operations.

14.6.5 The mooring lines between the unit and the attending vessel should, as far as practicable, be arranged so that if a line breaks, danger to personnel on both the attending vessel and the unit is minimized.

14.6.6 Discharges from the unit, such as those from the sewage system or ventilation from bulk tanks, should be arranged so that they minimize danger to personnel on the deck of attending vessels.

14.7 Diving systems

14.7.1 Diving systems, if provided, should be installed, protected and maintained so as to minimize, so far as practicable, any danger to personnel or the unit, due regard being paid to fire, explosion or other hazards.

14.7.2 Diving systems should be designed, constructed, maintained and certified in accordance with a national or international standard or code acceptable to the Administration[58], which may be employed for fixed diving systems, if provided.

---

[58] Refer to the Code of safety for diving systems, 1995, adopted by the Organization by resolution A.831(19).

14.8 Safety of navigation

14.8.1 The requirements of the Convention on the International Regulations for Preventing Collisions at Sea in force should apply to each unit except when stationary and engaged in drilling operations.

14.8.2 Each unit when stationary and engaged in drilling operations should comply with the requirements for the safety of navigation of the coastal State in whose territorial sea or on whose continental shelf the unit is operating.

14.8.3 Each unit when stationary and engaged in drilling operations should inform the national hydrographic office concerned about its position in latitude and longitude, together with the approximate duration of the operation so as to facilitate the promulgation of a temporary Notice to Mariners. Details of future movements of units should also be passed to national hydrographic offices so that temporary Notices may be promulgated before a unit gets underway.

14.9 Emergency procedures

Person in charge

14.9.1 The person on each unit to whom all personnel on board are responsible in an emergency should be clearly defined. This person should be designated by title by the owner or operator of the unit or the agent of either of them.

14.9.2 The person in charge should be well acquainted with the characteristics, capabilities and limitations of the unit. This person should be fully cognizant of his responsibilities for emergency organization and action, for conducting emergency drills and training, and for keeping records of such drills.

Manning of survival craft and supervision

14.9.3 There should be a sufficient number of trained persons on board for mustering and assisting untrained persons.

14.9.4 There should be a sufficient number of certificated persons on board for launching and operating the survival craft to which personnel are assigned.

14.9.5 Certificated persons should be placed in command and as second-in-command of each lifeboat.

14.9.6 The person in command of the lifeboat and the second-in-command should have a list of all persons assigned to the boat and should see that persons under their command are acquainted with their duties.

14.9.7 Every lifeboat should have a person assigned who is capable of operating the lifeboat radio equipment.

14.9.8 Every lifeboat should have a person assigned who is capable of operating the engine and carrying out minor adjustments.

14.9.9 The person in charge of the unit should ensure the equitable distribution of persons referred to in paragraphs 14.9.3, 14.9.4 and 14.9.5 among the unit's survival craft.

Muster list

14.9.10 Muster lists should be exhibited in conspicuous places throughout the unit including the control rooms and accommodation spaces. Muster lists should be drawn up in the working language or languages of the crew.

14.9.11 The muster list should specify details of the general alarm system signals and also the action to be taken in all operating modes by every person when these alarms are sounded, indicating the location to which they should go and the general duties, if any, they would be expected to perform.

14.9.12 The following duties should be included in the muster list:

.1 closing of the watertight doors, fire doors, valves, vent inlets and outlets, scuppers, sidescuttles, skylights, portholes and other similar openings in the unit;

.2 equipping of the survival craft and other life-saving appliances;

.3 preparation and launching of survival craft;

.4 general preparation of other life-saving appliances;

.5 muster of visitors;

.6 use of communication equipment;

.7 manning of fire parties assigned to deal with fires;

.8 special duties assigned in respect to the use of fire-fighting equipment and installations;

.9 emergency duties on the helicopter deck; and

.10 special duties assigned in the event of an uncontrolled escape of hydrocarbons or hydrogen sulphide, including emergency shutdown.

14.9.13 The muster list should specify substitutes for key persons who may become disabled, taking into account that different emergencies may call for different actions.

14.9.14 The muster list should show the duties assigned to regularly assigned personnel in relation to visitors in case of emergency.

14.9.15 Each unit should have a current muster list revised as necessary to reflect any procedural changes.

14.9.16 In deciding on the level of detail to be included in the muster list, account should be taken of information available in other documents, e.g., operating manual.

14.10 Emergency instructions

Illustrations and instructions should be conspicuously displayed at muster stations, control positions, working spaces and accommodation spaces to inform all on board of:

.1 the method of donning lifejackets; and

.2 the method of donning immersion suits, if applicable.

14.11 Training manual and onboard training aids

A training manual and onboard training aids complying with the relevant requirements of SOLAS regulations II-2/15 and III/35 should be provided and relevant information made available to each person on board.

14.12 Practice musters and drills

14.12.1 One abandon unit drill and one fire drill should be conducted every week. Drills should be so arranged that all personnel participate in a drill at least once a month. A drill should take place within 24 h after a personnel change if more than 25% of the personnel have not participated in abandon unit and fire drills on board that particular unit in the previous month. The Administration may accept other arrangements that are at least equivalent for those units for which this is impracticable.

14.12.2 Drills and exercises should be conducted in accordance with the recommendations of the Organization.[59]

14.12.3 Different lifeboats should, as far as practicable, be lowered in compliance with the provisions of paragraph 14.12.2 at successive drills.

14.12.4 Drills should, as far as practicable, be conducted as if there were an actual emergency and should include at least the following:

.1 the functions and use of the life-saving appliances; and

.2 except for free-fall lifeboats, starting of engines and lowering of at least one lifeboat and, at least once every three months when conditions permit, launching and manoeuvring with the assigned operating crew on board.

14.12.5 As far as is reasonably practicable, rescue boats, including lifeboats which are also rescue boats, should be launched each month with their assigned crew aboard and manoeuvred in the water. In all cases these provisions should be complied with at least once every three months.

14.12.6 For lifeboats, except for lifeboats that are also rescue boats, the provisions of SOLAS regulation III/19.3.3.3 should be applied.

14.12.7 In the case of a lifeboat arranged for free-fall launching, the provisions of SOLAS regulation III/19.3.3.4 should be applied.

---

[59] Refer to the Recommendations on training of personnel on mobile offshore units, adopted by the Organization by resolution A.891(21).

14.13 Onboard training and instructions[60]

14.13.1 All persons should be provided with familiarization training in accordance with the recommendations of the Organization.

14.13.2 All persons should be provided with training in personal safety and emergency response commensurate with their assigned duties in accordance with the recommendations of the Organization.

14.14 Records

14.14.1 An official log or tour record[61] in a format acceptable to the Administration should be maintained on board the unit to include a record of:

.1 inspection of lifesaving equipment under paragraph 10.18.8; and

.2 drills and exercises under paragraph 14.9.2 and section 14.12.

14.14.2 If not included in the official log or tour record, the following additional information or records should be maintained for a period acceptable to the Administration:

.1 survey record under section 1.6;

.2 inspection and maintenance records related to means of access under paragraph 2.2.3.1.8;

.3 light ship data alterations log under paragraph 3.1.4;

.4 testing records and equipment changes for anchors and related equipment under paragraph 4.12.2;

.5 maintenance, inspection and testing records relating to fire-fighting equipment under paragraph 9.19.4;

.6 maintenance records related to life-saving equipment under section 10.18;

.7 inspections of cranes under paragraphs 12.1.5 and 12.1.6;

.8 rated capacities of lifting and hoisting equipment under paragraph 12.2.2; and

.9 muster lists under paragraph 14.9.10.

14.14.3 A copy of the documentation, as approved by the Administration, indicating that any alternative design and arrangements comply with sections 4.2, 5.2, 9.1 and 10.2 of this Code should be carried on board the unit.

---

[60] Refer to the Recommendations on training of personnel on mobile offshore units, adopted by the Organization by resolution A.891(21).

[61] Refer to the International Association of Drilling Contractors' Daily Drilling Report.

Appendix

Model form of Mobile Offshore Drilling Unit Safety Certificate (2009)

MOBILE OFFSHORE DRILLING UNIT SAFETY CERTIFICATE (2009)

(Official seal) *(State)*

Issued under the provisions of the

IMO CODE FOR THE CONSTRUCTION AND EQUIPMENT OF MOBILE OFFSHORE DRILLING UNITS, 2009

under the authority of the Government of

.....
(full designation of the State)

by .....
(full official designation of the competent person or organization authorized by the Administration)

Distinctive identification (name or number)	**Type (section 1.3 of the Code)**	**Port of registry**

Date on which keel was laid or unit was at a similar stage of construction or on which major conversion was commenced .....

THIS IS TO CERTIFY:

1 That the above-mentioned unit has been duly surveyed in accordance with the applicable provisions of the Code for the Construction and Equipment of Mobile Offshore Drilling Units, 2009.

2 That the survey showed that the structure, equipment, fittings, radio station arrangements and materials of the unit and the condition thereof are in all respects satisfactory and that the unit complies with the relevant provisions of the Code.

3 That the life-saving appliances provide for a total number of ..... persons and no more as follows:

.....

4 That, in accordance with section 1.4 of the Code, the provisions of the Code are modified in respect of the unit in the following manner:

.....

5 That this unit has been issued with an approval for the continuous survey techniques under paragraph 1.6.4 of the Code in lieu of renewal and intermediate surveys in respect of:

Hull ☐ Machinery ☐

.....	.....
signature and seal of approving authority	*date of continuous survey programme approval*

This certificate is valid until ..... day of ..... 20 .....

Issued at .....
(place of issue of certificate)

.....	.....
(date of issue)	*signature of authorized official issuing the certificate*

.....
(seal or stamp of the issuing authority, as appropriate)

Endorsement for annual and intermediate surveys

This is to certify that, at a survey under section 1.6 of the Code, this unit was found to comply with the relevant provisions of the Code.

Annual survey: signed .....
(signature of authorized official)

place .....

date .....

(seal or stamp of authority, as appropriate)

Annual/intermediate survey: signed .....
(signature of authorized official)

place .....

date .....

(seal or stamp of authority, as appropriate)

Annual/intermediate survey: signed .....
(signature of authorized official)

place .....

date .....

(seal or stamp of authority, as appropriate)

Annual survey: signed .....
(signature of authorized official)

place .....

date .....

(seal or stamp of authority, as appropriate)

Annual/intermediate survey in accordance with paragraph 1.6.11.7.3 of the Code

Annual survey: signed .....
(signature of authorized official)

place .....

date .....

(seal or stamp of authority, as appropriate)

Endorsement for the dry-dock survey

This is to certify that, at a survey under section 1.6 of the Code, this unit was found to comply with the relevant provisions of the Code.

First inspection: signed .....
(signature of authorized official)

place .....

date .....

(seal or stamp of authority, as appropriate)

Second inspection: signed .....
(signature of authorized official)

place .....

date .....

(seal or stamp of authority, as appropriate)

Endorsement to extend the certificate if valid for less than five years where paragraph 1.6.11.3 of the Code applies

This unit complies with the relevant provisions of the Code, and this certificate should, in accordance with paragraph 1.6.11.3 of the Code, be accepted as valid until .....

signed .....
(signature of authorized official)

place .....

date .....

(seal or stamp of authority, as appropriate)

Endorsement where the renewal survey has been completed and paragraph 1.6.11.4 of the Code applies

This unit complies with the relevant provisions of the Code, and this certificate should, in accordance with paragraph 1.6.11.4 of the Code, be accepted as valid until .....

signed .....
(signature of authorized official)

place .....

date .....

(seal or stamp of authority, as appropriate)

Endorsement to extend the validity of the certificate until reaching the port of survey where paragraph 1.6.11.5 of the Code applies

This certificate should, in accordance with paragraph 1.6.11.5 of the Code, be accepted until .....

signed .....
(signature of authorized official)

place .....

date .....

(seal or stamp of authority, as appropriate)

Endorsement for the advancement of the anniversary date where paragraph 1.6.11.7 of the Code applies

In accordance with paragraph 1.6.11.7 of the Code, the new anniversary date is .....

signed .....
(signature of authorized official)

place .....

date .....

(seal or stamp of authority, as appropriate)

In accordance with paragraph 1.6.11.7 of the Code, the new anniversary date is .....

signed .....
(signature of authorized official)

place .....

date .....

(seal or stamp of authority, as appropriate)